DOE F 1325.8

United States Government **Department of Energy (DOE)**

memorandum

Savannah River Operations Office (SR)

DATE: AUG 3 1 2007

REPLY TO ATTN OF: TSD (Mark A. Smith, 803-952-9613)

SUBJECT: Request for Concurrence with Recommendation of the Defense Nuclear Facilities Safety Board 2004-2 Final Report for the Savannah River Site (SRS) H-Canyon and HB-Line Facilities

TO: Dae Y. Chung, Deputy Assistant Secretary for Safety Management and Operations (EM-60), HQ

In accordance with the DNFSB 2004-2 Implementation Plan (IP) Deliverable 8.6.5, please find attached to this memorandum the DNFSB 2004-2 Final Report for the SRS H-Canyon and HB-Line Facilities. After completing the evaluation, three gaps were identified affecting four of the H-Canyon performance critieria and five of the HB-Line performance criteria. The gaps are:

- Failure of the stack liner in a seismic event
- Failure of the stack & stack liner in a tornado/wind event
- Temporary release of unfiltered air from HB-Line during a fire event

SRS recommends that the H-Canyon Safety Basis upgrade, currently underway, identify if system upgrades are warranted to resolve the two gaps related to the stack/stack liner. SRS also concurs with the H-Canyon decision to include the stack/stack liner upgrades in the potential list of upgrades that require funding to support new missions.

SRS recommends that the HB-Line Safety Basis upgrade, commencing this 4th Quarter Fiscal Year 2007, identify if system upgrades are warranted to resolve the gaps identified in the attached report. Any gap resolution will be considered during the Documented Safety Analysis review and approval process.

In accordance with IP deliverable 8.6.5, please provide Program Secretarial Officer concurrence with these recommendations within 90 days of receipt of this report.

If you have any questions, please contact Mark A. Smith at 803-952-9613.

William F. Spoon

for Jeffrey M. Allison
Manager

TSD:MAS:dmy

OSQA-07-0125

Attachment:
2004-2 Final Report for H-Canyon and HB-Line Facilities

cc wo/attachment:
Dr. Robert C. Nelson (EM-61), HQ
Percy Fountain (EM-3.2), HQ

SRS SITE EVALUATION TEAM CONCURRENCE
Final DNFSB 2004-2 Evaluation Report

Facility: **H-Canyon and HB-Line Facility.** WSRC Letter FM&O-MDO-2007-00222, R1 "DNFSB 2004-2 Ventilation Implementation Final Report for H-Canyon, Revision 1"

Reference:

1. Commitment 8.6.3 of DNFSB 2004-2 Implementation Plan Revision 1, dated July 12, 2006

2. Ventilation System Evaluation Guidance for Safety-Related and Non-Safety-Related Systems, dated July 2006, Revision 1.

In accordance with the references above, the SRS Site Evaluation Team has reviewed and concurs with the submittal of the attached H-Canyon and HB-Line Final Report.

Site Evaluation Team (SET) Concurrence:

Signature on file _____ 08/27/07
Mark A. Smith, DOE-SR, Site Lead for SET Date

Signature on file _____ 08/27/07
Ken W. Stephens, WSRC Lead for SET Date

SRS Site Evaluation Team consists of the following personnel:

DOE Site Lead and SET Chairman (Mark A. Smith, OSQA/TSD)
DOE Alternate Site Lead & Safety Basis SME (Don J. Blake, AMWDP/WDED)
DOE Ventilation System and Natural Phenomena Hazards SME (Brent J. Gutierrez, AMWDP/WDED)
WSRC 2004-2 Site Lead Ken W. Stephens (TQS/Nuclear Safety, Transportation, and Engineering Standards Dept. Mgr.)
WSRC Alternate Site Lead & Safety Basis SME (Andrew M. Vincent, M&O Chief Engineer Dept.)
WSRC Ventilation System SME (Scott J. MacMurray, SRNL Facility Engineering)
WSMS Safety Basis SME (Jerry L. Hansen)
WSRC SET Assistant Project Manager (Barbara A. Pollard, Nuclear Safety Dept.)

SAVANNAH RIVER SITE
Aiken, SC 29808 • www.srs.gov

AUG 2 4 2007

FM&O-MDO-2007-00222, R1
RSM Track #: 10095

Mr. Carl A. Everatt, Director
Office of Safety and Quality Assurance
U. S. Department of Energy
Savannah River Operations Office
P.O. Box A
Aiken, SC 29808

Dear Mr. Everatt:

DNFSB 2004-2 Ventilation Implementation Final Report for H-Canyon, Revision 1

References:

1. WSRC Memorandum M&O-MDO-2007-00095, from W.E. Harris to C.A. Everatt, "DNFSB 2004-2 Ventilation Implementation (Table 4.3) H-Canyon Ventilation System".

2. WSRC Memorandum M&O-MDO-2007-00174, from W.E. Harris to C.A. Everatt, "DNFSB 2004-2 Ventilation Evaluation (Table 5.1) H-Canyon Ventilation System".

Various DNFSB 2004-2 documents refer to an "H-Canyon Ventilation System," which is actually an integrated ventilation system providing confinement for both H-Canyon and HB-Line Facilities. This letter transmits the final report of DNFSB Recommendation 2004-2, *Active Confinement Systems for the H-Canyon and HB-Line Facilities located at the Savannah River Site (SRS)*, for Site Evaluation Team review and concurrence. This is in accordance with Department of Energy (DOE) guidance provided in "Ventilation System Evaluation Guidance for Safety-Related and Non-Safety Related Systems," Revision 0, January 2006 (hereafter called the DOE guidance document). The Facility Evaluation Team (FET) has concurred with the information contained herein. Revision 1 addresses comments from the SET and FET; there are no changes to the conclusions of the report.

As previously discussed in the transmittal of Table 4.3 to the Site Evaluation Team (Ref 1), the H-Canyon and HB-Line facilities are identified as Hazard Category 2. The active Confinement Ventilation Systems (CVSs) are functionally classified as Safety Class. This functional classification is based upon the high radiological dose consequences to both on-site and off-site receptors from postulated events as evaluated in the Safety Analysis Report (SAR) for each facility.

The DOE guidance document requires a functional review of the facility CVS using a system evaluation approach. Functional design and performance attributes are defined to provide a structured approach to the evaluation and to address a generic set of attributes potentially applicable to a CVS. The DOE guidance document requires a review of the Hazard Category 2

facilities, Documented Safety Analysis, and the generic performance criteria provided in the DOE guidance document to identify gaps in the ventilation system and/or safety basis documents. The system evaluation involved a functional review of the H-Canyon and HB-Line Ventilation Systems to SC performance criteria. After completing this review, three gaps were identified affecting four of the H-Canyon evaluation criteria and five of the HB-Line evaluation criteria. The gaps are:

- Failure of the stack liner in a seismic event
- Failure of the stack & stack liner in a tornado/wind event
- Temporary release of unfiltered air from HB-Line during a fire event

These gaps were deemed to be discretionary in nature since none of the gaps involved a discrepancy between the Safety Basis requirements and the facility designs. Note that H-Canyon and HB-Line SAR accident consequences have not been calculated using current EM Interim Guidance, but work is underway to revise the SARs to current guidance. For example, 50% meteorology was used for the Co-located Worker instead of 95% but source terms may be reduced and accident scenarios may become less conservative to offset the meteorology increase.

The FET recommends that the H-Canyon Safety Basis upgrade, currently underway, identify if system upgrades are warranted to resolve the two gaps dealing with the stack/stack liner. The FET also concurs with the prudent H-Canyon decision to include the stack/stack liner upgrades in the list of upgrades that require funding to support new missions. Conceptual studies have been done that evaluate several upgrade options that cost between $2 and $6 million.

The third gap affects the HB-Line only. The modifications to close this gap would be to reduce the source term and fire-harden the room exhaust system for Levels 5 and 6 or to seal expansion joints and prevent leakage through exterior doors. To close the gap for Levels 3 and 4, a credited interlock to shut down the supply fans would be needed. For the $5^{th}/6^{th}$ level events, it has not been determined if the current exhaust system can be modified or if the system must be replaced, possibly in a separate building. A pre-conceptual estimate of the cost of these upgrades is $5-10 million.

The HB-Line DSA is scheduled to be updated to improve alignment with DOE-STD-3009-94 requirements. The current accident analyses include many very conservative assumptions, and reanalysis will focus on which assumptions are warranted. The HB-Line mission is changing. There are no remaining plutonium solutions in H-Canyon (this could remove over half the source term for Levels 3/4), and neptunium processing is scheduled to be completed by the end of CY 2007. Further, new security restrictions will significantly lower allowable radioactive material inventory if plutonium oxide is declared Attractiveness Category 1 rather than 2. The DSA revision is scheduled to start this summer, and the accident analysis results should be available early in CY 2008. The FET recommends that the HB-Line Safety Basis upgrade, to commence this summer, identify if system upgrades are warranted to resolve the gaps. Any gap resolution will be considered during the DSA review/approval process.

AUG 2 4 2007

Facility Evaluation Team Concurrence:

B. J. Gilliam
DOE
8/23/07
Date

R. A. Frushour
FET/H-Canyon Lead
8/22/07
Date

for D.W. Murdoch
D. W. Murdoch
HB-Line Lead
8/23/07
Date

Sincerely,

W. E. Harris, Jr., Chief Engineer
H-Area Material Disposition Project

weh/rf

Att.

AUG 2 4 2007

c: J. C. Barnes, DOE-SR, 704-2H

T. M. Smith, DOE-SR, 704-2H

J. D. Kekacs, DOE-SR, 704-2H

M. A. Smith, DOE-SR, 730-B

C. C. Harris, DOE-SR, 703-H

N. P. Garrett, DOE-SR, 704-2H

K. W. Stephens, 730-4B

S. A. MacVean, 704-2H

B. D. Smith, 704-2H

C. R. Goergen, 704-2H

S. J. Howell, 221-H

S. E. Booth, 221-H

S. A. Yano, 704-2H

S. E. Federman, 704-2H

G. J. Zachman, 704-2H

R. L. Huffines, 704-2H

R. A. Frushour, 704-2H

D. W. Murdoch, 704-2H

B. R. Moncrief, 249-7H

K. D. Scaggs, 704-2H

J. A. Mundo, 704-2H

D. E. Welliver, 704-185H

H. Branham, 704-2H

P. R. Prichard, 221-13H

D. C. Massey, CCC-3

L. L. Wright, 704-2H

Records Admin., 773-52A

B. Vercen, 730-4B

Savannah River Site
H-Canyon and HB-Line
DNFSB Recommendation 2004-2
Ventilation System Evaluation

Table of Contents

Definitions 7

Acronyms 8

Executive Summary 9

1. Introduction 11

1.1 Facility Overview 11

1.2 Confinement Ventilation System/Strategy 11

1.3 Major Modifications 13

2. Functional Classification Assessment 13

2.1 Facility Overview 13

2.2 Evaluation 14

2.3 Summary 14

3. System Evaluation 14

3.1 Identification of Gaps 14

3.2 Gap Evaluation 15

3.3 Modifications and Upgrades 16

4. Conclusion 17

5. References 18

Attachment 1 – 2004-2 Table 4.3, H-Canyon Data Collection Table 19

Attachment 2 – 2004-2 Table 4.3, HB-Line Data Collection Table 25

Attachment 3 – 2004-2 Table 5.1, H-Canyon Ventilation System Performance Criteria 31

Attachment 4 – 2004-2 Table 5.1, HB-Line Ventilation System Performance Criteria 39

Attachment 5 – Facility Evaluation Team Composition and Biographical Sketches 47

List of Figures 48

Definitions

Confinement	A building space, room, cell, glovebox, or other enclosed volume in which air supply and exhaust are controlled, and typically filtered.
Confinement System	The barrier and its associated systems (including ventilation) between areas containing hazardous materials and the environment or other areas in the facility that are normally expected to have levels of hazardous material lower than allowable concentration limits.
Hazard Category	Hazard Category is based on hazard effects of unmitigated release consequences to offsite, onsite and local workers.
Performance Category	A classification based on a graded approach used to establish the NPH design and evaluation requirements for structures, systems, and components required to supply air to, circulate air within, and remove air from a building/facility space by natural or mechanical means.
Ventilation System	The ventilation system includes the structures, systems, and components required to supply air to, circulate air within, and remove air from a building/facility space by natural or mechanical means.

Acronyms

AC	Administrative Control
AN	Ammonium Nitrate
CY	Calendar Year
CVS	Confinement Ventilation System
CW	Co-Located Worker (100 meters)
DBE	Design Basis Earthquake
DBT	Design Basis Tornado
DiD	Defense-in-Depth
DNFSB	Defense Nuclear Facility Safety Board
DOE	Department of Energy
dp	Differential Pressure
DSA	Documented Safety Analysis
EG	Evaluation Guideline
FET	Facility Evaluation Team
HEPA	High Efficiency Particulate Air
LPF	Leak Path Factor
MAR	Material at Risk
MOI	Maximally Exposed Offsite Individual
NPH	Natural Phenomena Hazard
OHBL	Old HB-Line
PC	Performance Category
PS	Production Support
PVV	Process Vessel Vent
rem	Roentgen Equivalent Man
SAR	Safety Analysis Report
SC	Safety Class
SRS	Savannah River Site
SS	Safety Significant
SSC	Structure, System, and Component
TBP	Tri-butyl phosphate
TSR	Technical Safety Requirements

Executive Summary

On December 7, 2004, the Defense Nuclear Facilities Safety Board (DNFSB) issued Recommendation 2004-2, Active Confinement Systems. Recommendation 2004-2 noted concerns with the safety system (Safety Class/Safety Significant) designation strategy utilized in several facilities to confine radioactive materials during or following accidents. The DNFSB main issue is that for the purpose of confining radioactive materials through a facility-level ventilation system, safety system designation should be based on the active safety function (forced air though a filter system) rather than reliance on a passive confinement system.

The Department of Energy (DOE) agreed to review all Hazard Category 2 and 3 defense nuclear facilities and developed a methodology to perform a system evaluation for the identified facilities. This confinement ventilation evaluation is for the H-Canyon and HB-Line facilities at the Savannah River Site (SRS). The evaluation was performed in accordance with the requirements of Ref. 7 (hereafter called the DOE guidance document).

Various DNFSB 2004-2 documents refer to an "H-Canyon Ventilation System," which is actually an integrated ventilation system providing confinement for both H-Canyon and HB-Line. Both the H-Canyon and HB-Line buildings are radiochemical processing plants. Operations conducted in H-Canyon include the separation and recovery of uranium from irradiated and unirradiated materials. HB-Line operations include processing of solid scrap material and the storage and repackaging of uranium and plutonium material. Both facilities described herein are identified as Hazard Category 2. Active confinement ventilation systems in these facilities are safety related due to high radiological dose consequences to both on-site and off-site receptors from postulated events.

The system evaluation involved a functional review of the H-Canyon and HB-Line Ventilation Systems to Safety Class (SC) performance criteria. This review assessed the H-Canyon/HB-Line Safety Analysis Reports (SARs) (Ref. 1 and 2) and the H-Canyon/HB-Line Ventilation Systems against the performance criteria in the DOE guidance document to identify gaps between the expected SC performance criteria of the DOE guidance document and the subject ventilation systems.

The Facility Evaluation Team (FET) evaluated the safety-related H-Canyon/HB-Line Confinement Ventilation System (CVS) in accordance with Ref. 7, using the SC evaluation criteria of Table 5.1 (Attachments 3, 4). Of the three gaps identified, two directly affected both H-Canyon and HB-Line. Gap numbers 1 and 2 concern the SS 291-H Exhaust Stack and stack liner. The stack liner is assumed to collapse in a 0.04g earthquake. The ventilation system is expected to withstand a Design Basis Earthquake (DBE) other than the stack liner. The H-Canyon SAR (Ref. 1) assumes that the airflow will be stagnant for up to 48 hours until an airflow pathway is restored. Additionally, for winds stronger than PC-2 but less than PC-3 levels, the concrete 291-H stack will fail at about the 68-foot level. If the stack fails at the 68-foot level, it will not hit any part of the H-Canyon Ventilation System such that it would cause a complete loss of the ventilation system. The Canyon and HBL structures will withstand a Design Basis Tornado (DBT) or wind event, so there are no releases inside the structure and no accident event recognized in the SAR for a DBT(Ref. 1).

The FET recommends that the H-Canyon Safety Basis upgrade, currently underway, identify if system upgrades are warranted to resolve the two gaps dealing with the stack/stack liner. The FET also concurs with the prudent H-Canyon decision to include the stack/stack liner upgrades in the list of upgrades that require funding to support new missions. Conceptual studies have been done that evaluate several upgrade options that cost between $2 and $6 million.

Gap number 3 concerns HB-Line fire events where there is a temporary loss of unfiltered air. The modifications to close Gap number 3 would be to reduce the source term and fire-harden the room exhaust system for Levels 5 and 6 or to seal expansion joints and prevent air leakage through exterior doors. To close the gap for Levels 3 and 4, a credited interlock to shut down the supply fans would be needed. For

the 5th/6th level events, it has not been determined if the current exhaust system can be modified or if the system must be replaced, possibly in a separate building. A pre-conceptual estimate of the cost of these upgrades is $5-10 million.

The HB-Line DSA is scheduled to be updated to improve alignment with DOE-STD-3009-94 requirements. The current accident analyses include many very conservative assumptions, and reanalysis will focus on which assumptions are warranted. The HB-Line mission is changing. There are no remaining plutonium solutions in H-Canyon (this could remove over half the source term for Levels 3/4), and neptunium processing is scheduled to be completed by the end of calendar year (CY) 2007. Further, new security restrictions will significantly lower allowable radioactive material inventory if plutonium oxide is declared Attractiveness Category 1 rather than 2. The HB-Line DSA revision is scheduled to start this summer, and the accident analysis results should be available early in CY 2008. The FET recommends that the HB-Line Safety Basis upgrade identify if system upgrades are warranted to resolve the gaps. Any gap resolution will be considered during the DSA review/approval process.

These gaps were found to be discretionary in nature since none of the gaps involve a discrepancy between the Safety Basis requirements and the facility configuration. None of the gaps result in accident consequences that exceed the evaluation guidelines. Note that H-Canyon and HB-Line SAR accident consequences have not been calculated using current EM Interim Guidance, but work is underway to revise the SARs to current guidance. For example, 50% meteorology was used for the Co-located Worker instead of 95%, but source terms may be reduced and accident scenarios may become less conservative to offset the meteorology increase.

1. Introduction

1.1 Facility Overview

H-Canyon Facility

The H-Canyon and related support facilities were constructed in the 1950s. The original mission of these facilities was to process irradiated/unirradiated uranium target assemblies to recover plutonium for national defense purposes. The facilities were later modified to process enriched uranium fuels and neptunium targets. H-Canyon and its support facilities are classified as Hazard Category 2, based upon uranium and plutonium radiological inventories. The process equipment is located in two parallel canyons – a "Hot" and a "Warm" Canyon, separated by a central operating and service section that is divided into four levels. The more highly radioactive processing operations are performed in the Hot Canyon. Figure 1 provides a typical cross section view of the H-Canyon.

HB-Line Facility

The HB-Line facility is classified as Hazard Category 2 and is comprised of a hardened structure located on the Fifth and Sixth Levels of the H-Canyon, a one-story office building appendage located on the Fifth Level of the H-Canyon, and a segregated area (outside the hot and warm canyons) in the southwest corner of the H-Canyon Third and Fourth Levels. The hardened structure and the office building are commonly referred to as the new HB-Line. The segregated area on the Third and Fourth Levels of H-Canyon is commonly referred to as the Old HB-Line (OHBL). Figure 3 provides an isometric view of Building 221-H The HB-Line is a large radiochemical processing facility that processes solid scrap material; conducts receipt, storage, unpackaging and repackaging of uranium material in scrap recovery; and processes radioactive solutions containing neptunium, plutonium and/or uranium.

1.2 Confinement Ventilation System/Strategy

H-Canyon Facility

The H-Canyon Exhaust Ventilation System is considered as the final confinement barrier for airborne contamination from the Hot and Warm Canyons. The functional requirement of the active confinement ventilation system is to provide a filtered ventilation pathway to mitigate radioactive releases. It is credited with limiting the spread of contamination from the Canyons, providing a high degree of filtration of the Canyon Exhaust, providing an elevated release point for the exhaust, and protecting facility workers during abnormal and normal events. A simplified functional diagram of the ventilation system is shown in Figure 2.

The Safety Class (SC) designated Canyon Ventilation System controls the spread of contamination in the Hot and Warm Canyons by ensuring that air flows from lesser contaminated areas to more contaminated areas and by filtering this air through sand filters 294-H and 294-1H before exhausting it to the atmosphere. The canyon supply system services the Warm Canyon, Hot Canyon, Crane Maintenance Areas, Hot Shop, Warm Shop, and Hot and Warm Decon Cells. Additional areas serviced by the canyon supply fans include areas of fourth level (crane maintenance vestibule, storage room, workshop) and areas of second level (HVAC room and swimming pool).

Four supply fans (two Hot Canyon and two Warm Canyon) supply air to the Hot and Warm Canyons. Each canyon runs one fan with the other fan in manual standby. If a fan fails, the operating supply fan on the opposite Canyon will be de-energized. Fans must be run in pairs and are electrically interlocked. Four exhaust fans remove air from the Hot and Warm Canyons to keep the canyons under a constant vacuum. Three fans are normally in service with one fan in standby. If the vacuum in the canyon exhaust tunnel drops below Technical Safety Requirement (TSR) limits, the canyon supply fans

will be de-energized and their discharge dampers will fail open. This is to prevent pressurizing the canyon, or setting favorable conditions for an air reversal.

Air in the Hot and Warm Canyons leaves through registers at the base of each cell to Hot and Warm Canyon exhaust air ducts that run parallel to their respective canyons. The warm canyon exhaust air duct also exhausts air from the Process Vessel Vent (PVV) fans. This air is combined in the canyon exhaust air tunnel along with air from the 5th and 6th levels of HB-Line. Air from 3rd and 4th levels of Old B-Line, RVV, and 299-H is discharged into the exhaust tunnel at building 292-H before the 294-H/294-1H sand filters.

The sand filters are constructed of layers of progressively smaller aggregate, starting with coarse stone on the bottom and ending with fine sand on the top. Airflow is from the bottom to the top. The two sand filters operate in parallel removing about 99.98% of the particulate radioactivity from the air, equivalent to a High Efficiency Particulate Air (HEPA) filter. The accident analysis in the H-Canyon SAR assumes that the sand filters are 99.51% efficient (0.49% filter penetration factor) in removing any radioactive particulates that are airborne in the canyon exhaust air stream. The exhaust air from the Canyon passes through the sand filters and out the 291-H stack. Crediting the stack height release gives a source reduction factor of 2 for the Maximally Exposed Offsite Individual (MOI).

The 254-19H Emergency Diesel Generator Electrical Distribution System is required to provide power to the H-Canyon Exhaust Fans designated as SC. This system includes two SC Standby Diesel Generators and provides electrical power to the 292-H Fan House and 254-19H Facility when normal power is lost. The 254-19H Building Structure is an SC design feature and houses the two generators and equipment required for the operability of the 254-19H Electrical Distribution System and the Canyon Exhaust Fans.

The confinement ventilation system is required to be operational in accordance with the Technical Safety Requirements (TSR). The Canyon Exhaust Air Tunnel, Canyon Exhaust Fans 294-H and 294-1H, Sand Filters, and the H-Canyon Supply Fan Interlock for low canyon exhaust air tunnel vacuum are all governed by a TSR. The Fan Damper Air System ensures that the Exhaust Fans can perform their safety function upon loss of site power and the normal Instrument Air supply.

HB-Line Facility

The HB-Line ventilation systems direct air from radiological clean areas to areas with increased potential of radiological contamination. The HB-Line ventilation systems interface with the process vessels, process cabinets, and facility structure to control airborne radioactivity and other hazardous materials. The ventilation system features a once-through airflow. All exhaust air from HB-Line is passed through the H-Canyon exhaust system. The final level of confinement is the H-Canyon Sand Filter and the building itself, which constitute the confinement barrier between the general public and the nuclear material. The HB-Line Building Structure (outside walls, exterior security doors, roofs, exterior ventilation tunnel and Sixth Level Floor), and the Ventilation Interlock (Building Vacuum) are classified as SC Structures, Systems and Components (SSCs). A simplified functional diagram of the ventilation system is shown in Figure 4.

Fifth and Sixth Level:
The Fifth and Sixth Level ventilation systems feature once-through airflow. A simplified functional diagram of these ventilation systems is shown in Figure 3. Air is introduced through the fresh air intake. Before entering the building, the air is filtered, dehumidified, and heated or cooled, as appropriate. The conditioned air is directed to the control rooms, operating areas, airlocks, corridors, and maintenance areas. Air is drawn from the maintenance areas and the operating areas by the room exhausters. The maintenance and operating areas draw additional air from the airlocks and corridors. The corridors, in turn draw air from the control rooms. The process cabinets draw air from the maintenance areas through inlet HEPA filters and prefilters. The air is drawn from the process cabinets by exhaust fans through a cabinet HEPA filter and two stages of additional HEPA filters. The exhaust

from the rooms and cabinets combine in a duct on the west side of 221-H on the First Level of H-Canyon, are drawn into the H-Canyon exhaust tunnel, through the Sand Filters by the 292-H exhaust fans, and are exhausted out the 195-foot stack. The H-Canyon exhaust tunnel, Sand Filters, and 195-foot stack are shared with H-Canyon and various other H-Area facilities.

Redundancy in the key components assures reliability during normal and anticipated off-normal conditions. The Fifth and Sixth Level ventilation exhaust equipment for the process facilities is tied into both the normal and the standby power buses. The system is also designed such that a single component or control function failure will not compromise minimum adequate ventilation. This includes single failure in interfacing systems.

Various ventilation interlocks respond to abnormal conditions to maintain the HB-Line facility in a safe configuration and prevent the release and spread of radioactive contamination. These interlocks include the building low vacuum interlock, H-Canyon warm tunnel low-low vacuum, loss of both glovebox exhausters in a pair, loss of a glovebox exhaust fan, and loss of both room exhaust fans.

Third and Fourth Level:
The entire Third and Fourth Level area is maintained at a slight negative pressure with respect to the H-Canyon. Supply air to the Third and Fourth Levels is provided from the H-Canyon Center Section supply system. Under Project CL03002, the Third and Fourth Level Ventilation room exhaust system configuration has been modified. The original 36-inch exhaust pipe duct located in the concrete duct inside the west wall of the 221-H Canyon has been isolated from the exhaust system and abandoned in place. The original exhaust fans, HEPA filter housings and ductwork in Building 292-H have also been abandoned in place.

Under the new configuration, two exhaust fans, two HEPA filter banks, and the associated ductwork are installed in Room 307. Room 312 was modified to be an exhaust distribution plenum that discharges to the Third Level Warm Canyon through a penetration cut in the north wall of the room. Exhaust entering the Warm Canyon is then exhausted via the normal Canyon Exhaust flow path.

1.3 Major Modifications

There are no Major Modifications currently underway or planned for these facilities.

2. Functional Classification Assessment

2.1 Facility Overview

Functional classification is performed in accordance with Procedure 2.25 of WSRC Procedure Manual E7, which meets the requirements of the Department of Energy (DOE) DOE-STD-3009-94. Functional classification is a graded classification system used to determine minimum requirements for SSCs (i.e., design, operation, procurement, and maintenance requirements). The purpose of functional classification is to identify SSCs and Administrative Controls (ACs) required to protect the public; protect the onsite worker, as well as the workers inside the facility; and prevent, monitor, or detect a nuclear criticality accident. The SSCs that provide protection for the public are classified as SC. The SSCs that provide criticality safety and protection for the onsite and facility worker are classified as SS. TSR controls are expected for SSCs and ACs that perform SC or SS functions.

The H-Canyon active CVS is functionally classified as SC. The only SS portion of the ventilation system is the 291-H Stack and Stack Liner. All structural components (221-HC & HBL, Concrete Duct, 292-H, 292-2H, and 294-H) are functionally classified as Performance Category 3 (PC-3). The Stack is classified as PC-2. There are no Production Support (PS) components.

The H-Canyon active confinement ventilation system and the passive confinement in both facilities is SC and include the following:

- H-Canyon Exhaust Air Tunnel
- Sand Filters 294-H and 294-1H
- H-Canyon Supply Fan Interlock for low Canyon Exhaust Air Tunnel Vacuum
- Canyon Exhaust Fans and Fan Damper Air System
- H-Canyon Building Structure
- 254-19H/292-H Building Structure
- HB-Line Building Structure (outside walls, exterior security doors, roofs, and exterior ventilation tunnel)
- HBL supply fan interlock & tornado dampers
- 254-19H Emergency Diesel Generator System.

2.2 Evaluation

The H-Canyon confinement supply and exhaust systems, sand filter, and the passive confinement in both facilities are credited as SC to protect the public and control releases that may exceed or challenge the 25-rem Evaluation Guideline (EG). These SC SSCs also provide an SS function to protect the Co-located Worker and control releases that may exceed or challenge the 100-rem evaluation criteria. Unique and bounding accident scenarios for which the H-Canyon SC CVS is credited to mitigate are evaluated in Section 8.3 of the H-Canyon SAR (Ref. 1) and Section 8.3 of the HB-Line SAR (Ref. 2).

2.3 Summary

The functional classification of the existing active CVS for the H-Canyon and the passive confinement for both facilities are appropriately classified as SC.

3. System Evaluation

3.1 Identification of Gaps

The H-Canyon and HB-Line active CVS was compared with SC system performance criteria in Table 5.1 of (Ref. 9). Prior to this evaluation, the ventilation and support systems were walked down and documentation was reviewed to confirm system configuration. The systems were then evaluated against the criteria in Table 5.1 and gaps were identified and documented in Attachments 3 and 4. The gaps were then evaluated to determine the scope of work for modifications to close each gap with appropriate cost/benefit analysis performed for the stack/stack liner gaps.

SRS evaluated the active CVS at H-Canyon and HB-Line Facilities in accordance with the DOE guidance provided in Ref. 7, (hereafter called the DOE guidance document).

The DOE guidance document requires a functional review of the facility CVS using a system evaluation approach. Functional design and performance attributes are defined to provide a structured approach to the evaluation and to address a generic set of attributes potentially applicable to a CVS. The DOE guidance document requires a review of Hazard Category 2 facility Documented Safety Analyses (Ref. 1 and 2), and a review of the generic performance criteria provided in the DOE guidance document to identify gaps in the ventilation system and/or safety basis documents. The system evaluation involved a functional review of the H-Canyon and HB-Line Ventilation Systems to SC performance criteria. After completing this review, three gaps were identified affecting four of the H-Canyon evaluation criteria and five of the HB-Line evaluation criteria.

3.2 Gap Evaluation

Three gaps were identified affecting four of the H-Canyon evaluation criteria and five of the HB-Line evaluation criteria. These three gaps are associated with the H-Canyon 291-H Stack, stack liner, and an HB-Line fire.

Gap number 1:
The H-Canyon stack liner is assumed to collapse in a 0.04g earthquake. The ventilation system is expected to withstand a DBE, except for the stack liner. The SAR assumes that the airflow will be stagnant for up to 48 hours. Due to the H-Canyon passive building confinement, radiological releases will not exceed the consequence guidelines for the period of time the system is inoperable.

The DBE scenario assumes that the canyon exhaust system is inoperable for a maximum of 48 hours, primarily due to stack liner collapse. The canyon structure, the exhaust system including the SC Canyon Exhaust Fans (including Fan Damper Air System), the 292-H Fan House, the Exhaust Tunnel, the 254-19H Diesel Generators (SC systems), and the stack (SS system) are assumed to remain essentially intact after the earthquake. The stack will withstand the PC-3 seismic loads but the brick stack liner will collapse and partially or completely block airflow through the stack (Ref. 4). The canyon building remains intact with minor cracks in the walls. The 254-19H Diesel Generators will provide power for the exhaust system after an earthquake. The safety analysis assumes that any one of four fans can be returned to operation within 48 hours, thereby pulling a minimum vacuum on the canyon. The benefit of replacing the stack or modifying the stack liner such that a collapse of the liner is prevented during a DBE would allow the stack/stack liner and the entire CVS to remain in an operable condition during a DBE event.

Gap number 2:
The H-Canyon stack will fail in a Design Basis Tornado (DBT) or wind event. The Canyon and HBL structures will withstand a Design Basis Tornado (DBT) or wind event, so there are no releases inside the structure and no accident event recognized in the SAR. High winds or tornado events causing failure of the 291-H stack would not simultaneously cause accidents inside the canyon, nor would there be credible accident scenarios whereby events inside the canyon would occur immediately after collapse of the stack. Since a high wind or tornado does not cause a release inside the canyon, the stack is not required to mitigate a potential release following collapse.

Calculation T-CLC-H-00312 (Ref. 5) has shown that in winds stronger than PC-2 but less than PC-3 levels, the concrete 291-H stack will fail at about the 68-foot level. If the stack fails at the 68-foot level, it would not hit any part of the H-Canyon Ventilation System such that it would cause a complete loss of the ventilation system. Calculation T-CLC-H-00799 (Ref. 6) determined that the stack falling from the 68-foot height will collapse part of the 292-H roof, but will not affect the ventilation fans, the Air Tunnels under 292-H, the 292-2H Fan House, or the 294-Sand Filter. If there is rubble (failed stack liner) inside the failed stack following collapse, rubble can be cleared or duct access doors can be opened inside 292-H to establish ventilation discharge at ground level. By replacing or modifying the stack, it would be qualified to PC-3 levels, eliminate the possibility of damage to surrounding facilities and personnel, and maintain operability of the CVS during a DBT.

Gap number 3:
Some temporary release of unfiltered air is anticipated during fire events in HB-Line due to release of large volumes of Halon and abrupt expansion of air due to heat input. However, passive confinement features keep consequences well below evaluation guidelines. The SC H-Canyon active confinement ventilation system is shared with HB-Line.

HB-Line Levels 5 and 6:
For fire events on 5th & 6th levels, the non-credited room exhaust fans, which discharge into the canyon exhaust tunnel, are conservatively assumed to fail. Although the canyon exhaust system continues to draw some air from HB-Line, it is not sufficient to avoid some release of unfiltered air through expansion joints and open doors.

HB-Line Levels 3 and 4:
For fire events on the 3rd & 4th levels, non-credited air supply fans are conservatively assumed to continue to operate while the non-credited exhaust fans, which discharge into the warm canyon are conservatively assumed to fail.

3.3 Modifications and Upgrades

Gaps number 1 and 2:
In order for the confinement ventilation system to operate continuously after a Performance Category 3 (PC-3) seismic event, it would likely be necessary to implement modifications to ensure that all ventilation systems remain operable. The Safety Analysis Report assumes that the airflow will be stagnant for up to 48 hours during a DBE. Options have been identified for modification or replacement of the stack/stack liner. An evaluation was completed on November 30, 2006 to provide Alternative Study Estimates for the Modification of the 291-H Stack (Ref. 3) to determine the most cost-effective path forward to modify the stack to meet PC-3 seismic and wind requirements. Options vary in cost, between $2 and $6 million. Another alternative to be evaluated is whether sufficient air can pass through the stack liner or stack rubble to maintain minimum facility vacuum. The four options for upgrading the stack are identified below:

Option 1: The stack height will be reduced from 200 feet to 113 feet. The ventilation system will remain operational for the duration of the modification. The exterior shell will be chipped and the liner will be removed one brick at a time including the removal of stainless steel bands and associated rebar. Due to the operation of the ventilation system, workers will be required to wear plastic suits supplied with breathing air. The annulus will be filled with foam to help stabilize the liner during a seismic event.

Option 2: Install an additional reinforced concrete shell up to an elevation of 160' that is 6 inches thick around the existing shell and provide dowels into the existing foundation. The ventilation system will remain operational during this modification. Entry is not required inside the stack. Drilling will be required to install hundreds of dowels and Maxibolts along with vertical and horizontal rebar. The annulus will be filled with foam to help stabilize the liner during a seismic event.

Option 3: Fabricate and install two 10,000 pound steel collars on the existing stack connected with three guy wires each attached to blocks of concrete with sufficient mass to anchor the stack. The 18' x 18' x10' blocks are each filled with 120 cubic yards of concrete. Relocation of existing equipment and utilities will be required to place the blocks. The ventilation system will remain operable during this modification. Workers will not be required to enter the stack. The annulus will be filled with foam to help stabilize the liner during seismic events.

Option 4: Build a replacement stack and demolish the old stack. This option is the most difficult to accomplish due to interference with H-Canyon operations. A temporary duct and stack is needed until the new stack is completed. The 120 foot new steel stack will have a proposed 10 foot diameter with a ¾" wall thickness and will be assembled in two sections.

Of the four options explored, Option 2 with the gunite reinforcement is favored technically. The gunite and foam reinforcement appears to be the surest way to the desired result of a PC-3 qualified stack, with the least impact to operations.

Upgrades are currently included in the multi-year plan for facility infrastructure upgrades. The current H-Canyon SAR is being revised per current DOE-EM Interim Guidance. This revision will consider

revising the earthquake accident analysis to reduce/eliminate the assumed time that the active ventilation system is unavailable after an earthquake.

Gap number 3:
For HB-Line 5th and 6th Levels, fire-resistant storage capability needs to be provided for large Material Control & Accountability (MC&A) calibration standards. It is estimated that this would lower the consequences from the 5th and 6th Level accidents by 40% - 60%. In addition, one of two options to reduce the release of unfiltered air is needed. One option to prevent an unfiltered air release is to fire-harden the HB-Line 5th and 6th Level exhaust ventilation system that would maintain Levels 5/6 at negative pressure during the short time that heating the inside atmosphere would expel unfiltered air from the building during fires. It is estimated that a 30,000 cfm capacity system would maintain Levels 5/6 negative during all fires. Since an earthquake/fire combination is currently deemed credible for HB-Line, all equipment would need to be seismically qualified. The second option, which has significant technical risk, is to seal the leakage paths for unfiltered air to leave from HB-Line. Leakage through exterior doors would have to be eliminated even during personnel evacuation and fire department response. The building expansion joints are currently assumed to degrade during a fire and would have to be sealed

For HB-Line 3rd and 4th Levels, the installation of SC pressure measurement devices and circuits that would stop the supply fans during fires/earthquakes would decrease the doses by 85% or more.

A pre-conceptual estimate for these HB-Line upgrades to close gap 3 is $5-10 million. The HB-Line DSA is scheduled to be updated to improve alignment with DOE-STD-3009-94 requirements. The current accident analyses include many very conservative assumptions, and reanalysis will focus on which assumptions are warranted. The HB-Line mission is changing. There are no remaining plutonium solutions in H-Canyon (this could remove over half the source term for Levels 3/4), and neptunium processing is scheduled to be completed by the end of CY 2007. Further, new security restrictions will significantly lower allowable radioactive material inventory if plutonium oxide is declared Attractiveness Category 1 rather than 2. The DSA revision is scheduled to start this summer, and the accident analysis results should be available early in CY 2008.

4. Conclusion

The FET evaluated the safety-related H-Canyon/HB-Line CVS in accordance with Ref. 7, using the SC criteria of Table 5.1. Of the three gaps identified, two directly affect both H-Canyon and HB-Line. Gaps number 1 and 2 concern the SS 291-H Exhaust Stack and stack liner. Gap number 3 concerns the possibility of an unfiltered release to the outside due to a fire. These gaps were found to be discretionary in nature since none of the gaps involve a discrepancy between the Safety Basis requirements and the facility configuration. None of the gaps result in accident consequences that exceed the Evaluation Guidelines. Note that H-Canyon and HB-Line SAR accident consequences have not been calculated using current DOE-EM Interim Guidance, but work is underway to revise the SARs to current guidance. For example, 50% meteorology was used for the Co-located Worker instead of 95% but source terms may be reduced and accident scenarios may become less conservative to offset the meteorology increase.

The FET recommends that the H-Canyon Safety Basis upgrade, currently underway, identify if system upgrades are warranted to resolve the two gaps dealing with the stack/stack liner. The FET also concurs with the prudent H-Canyon decision to include the stack/stack liner upgrades in the list of upgrades that require funding to support new missions. Conceptual studies have been done that evaluate several upgrade options that cost between $2 and $6 million. For gap number 3, the FET recommends that the HB-Line Safety Basis upgrade identify if system upgrades are warranted to resolve the gaps. Any gap resolution will be considered during the DSA review/approval process. A pre-conceptual estimate for the HB-Line upgrades is $5–10 million.

5. References

1. WSRC-SA-2001-00008, Revision 10, H-Canyon Safety Analysis Report, January 2007.

2. WSRC-SA-2001-00009, Revision 5, HB-Line Safety Analysis Report, August 2006.

3. PDCS-SEG-2006-00077, Final Alternative Study Estimates for Modification of the 291-Stack, October 4, 2006.

4. Peregoy, W.E. T-CLC-H-00798, Rev. 1, Structural Evaluation of the Effects of 291-H Chimney Liner Collapse. Washington Savannah River Company, Aiken, SC. April 2006.

5. Peregoy, W.E. T-CLC-H-00312, Rev. 3, 291-H & F Stack PC-2 Seismic Wind Evaluation. Washington Savannah River Company, Aiken, SC. April 2006.

6. Kennedy, W.N. T-CLC-H-00799, Rev. 0, Evaluation of 291-H and 291-F Stack Collapse. Washington Savannah River Company, Aiken, SC. March 2006.

7. Ventilation System Evaluation Guidance for Safety Related and Non-Safety Related Systems, Revision 0, January 2006 and the 2004-2 Ventilation System Evaluation Guidance Addendum, March 6, 2007.

8. WSRC Memorandum M&O-MDO-2007-00095, from W. E. Harris to C. A. Everatt, DNFSB 2004-2 Ventilation Implementation (Table 4.3) H-Canyon Ventilation System.

9. WSRC Memorandum M&O-MDO-2007-00174, from W. E. Harris to C. A. Everatt, DNFSB 2004-2 Ventilation Evaluation (Table 5.1) – H-Canyon Ventilation Systems.

10. C.C. Fields, S-CLC-H-00661, Best Estimate Accident Analysis for the Upgraded HB-Line BIO (U), Washington Savannah River Company, Aiken, SC, Rev. 1, June 1999.

11. D. F. Paddleford, S-CLC-H-00663, HB-Line Leak Path Factor Study Support the Upgraded BIO (U), Washington Savannah River Company, Aiken, SC, Rev. 0, August 1998.

12. W.D. Salyer, S-CLC-H-00794, Accident Analysis for Old HB-Line (Level 3 and 4), Washington Savannah River Company, Aiken, SC, Rev. 6, June 2006.

Attachment 1

DNFSB Recommendation 2004-2 Table 4.3

H-Canyon Ventilation System Data Collection Table

Attachment 1 - 2004-2 Table 4.3, H-Canyon Ventilation System Data Collection Table

ATTACHMENT 1

Confinement Documented Safety Analysis Information										
H-Canyon				Hazard Category 2				Performance Expectations		
Bounding Accidents [9]	Type Confinement		Doses Bounding unmitigated / mitigated [1, 2]	Confinement Classification			Safety Function	Functional Requirements	Performance Criteria	Compensatory Measures
	Active	Passive		SC	SS	DID				
Explosion-TBP [5] Nitric Acid (Red Oil) Runaway Reaction. (8.3.2.2.1)	X		Unmitigated [3] MOI = 88 rem CW = 124 rem Mitigated [4] MOI = 0.22 rem CW = 0.31 rem	X[6]	X[7]		Confinement for public protection and collocated worker protection.	Provide a filtered ventilation pathway to mitigate radioactive releases.	SC-SSC CVS with 99.51% efficient sand filters.	None
Hydrogen Deflagration in Dissolver. (8.3.2.2.3)	X		Unmitigated [13] MOI = 2.52 rem CW = 4 rem Mitigated [4] MOI = 0.0063 rem CW = 0.01 rem	X[6]	X[7]		Confinement for public protection and collocated worker protection.	Provide a filtered ventilation pathway to mitigate radioactive releases.	SC-SSC CVS with 99.51% efficient sand filters.	None
Hydrogen Deflagration caused by Radiolysis. (8.3.4.4.3)	X		Unmitigated [3] MOI = 37.2 rem CW = 64 rem Mitigated [4] MOI = 0.093 rem CW = 0.16 rem	X[6]	X[7]		Confinement for public protection and collocated worker protection.	Provide a filtered ventilation pathway to mitigate radioactive releases.	SC-SSC CVS with 99.51% efficient sand filters.	Note
Explosion-Ammonium Nitrate (AN) in the Process Vessel Vent (PVV) Filters. (8.3.2.2.4)	X		Unmitigated [3] MOI = 600 rem CW = 4000 rem Mitigated [4] MOI = 1.5 rem CW = 10 rem	X[6]	X[7]		Confinement for public protection and collocated worker protection.	Provide a filtered ventilation pathway to mitigate radioactive releases.	SC-SSC CVS with 99.51% efficient sand filters.	None

Attachment 1 - 2004-2 Table 4.3, H-Canyon Ventilation System Data Collection Table

Confinement Documented Safety Analysis Information										
H-Canyon				Hazard Category 2				Performance Expectations		
Bounding Accidents [9]	Type Confinement		Doses Bounding unmitigated / mitigated [1, 2]	Confinement Classification			Safety Function	Functional Requirements	Performance Criteria	Compensatory Measures
	Active	Passive		SC	SS	DID				
Uncontrolled Reaction/Fire-Resin Digestion (8.3.2.2.6)	X		Unmitigated [10] MOI = 0.05 rem CW = 26.6 rem Mitigated [11] MOI = 0.000125 rem CW = 0.0665 rem	X[6]	X[7]		Confinement for public protection and collocated worker protection	Provide a filtered ventilation pathway to mitigate radioactive releases.	SC-SSC CVS with 99.51% efficient sand filters.	None
Organic Solvent Fire. (8.3.2.3.3)	X		Unmitigated [3] MOI = 0.04 rem CW = 0.044 rem Mitigated [4,] MOI = 0.001 rem CW = 0.00011 rem	X[6]	X[7]		Confinement for public protection and collocated worker protection.	Provide a filtered ventilation pathway to mitigate radioactive releases.	SC-SSC CVS with 99.51% efficient sand filters.	None
Natural Phenomena Event: Earthquake, Straight Winds or Tornado, H-Canyon Process. [14] (8.3.2.8)	X[8]	X[8]	Unmitigated [8] MOI = 13 rem CW = 2122 rem Mitigated [8] MOI = 0.46 rem CW = 22 rem	X[6]	X[7]		Confinement for public protection and collocated worker protection.	Provide a filtered ventilation pathway after 48 hours to mitigate radioactive releases.	SC-SSC CVS with 99.51% efficient sand filters.	None
Waste Packaging (Impact events). (8.3.4)	X		Unmitigated [3] MOI = 0.132 rem CW = 56 rem Mitigated [12] MOI = 3.3E-04 rem CW = 0.14 rem	X[6]	X[7]		Confinement for public protection and collocated worker protection.	Provide a filtered ventilation pathway to mitigate radioactive releases.	SC-SSC CVS with 99.51% efficient sand filters.	None

Attachment 1 - 2004-2 Table 4.3, H-Canyon Ventilation System Data Collection Table

Confinement Documented Safety Analysis Information										
H-Canyon				Hazard Category 2				Performance Expectations		
Bounding Accidents [9]	Type Confinement		Doses Bounding unmitigated / mitigated [1, 2]	Confinement Classification			Safety Function	Functional Requirements	Performance Criteria	Compensatory Measures
	Active	Passive		SC	SS	DID				
Waste Packaging (Fire). (8.3.4)	X		Unmitigated [3] MOI = 0.048 rem CW = 8.0 rem Mitigated [12] MOI = 1.2E-04 rem CW = 0.02 rem	X[6]	X[7]		Confinement for public protection and collocated worker protection.	Provide a filtered ventilation pathway to mitigate radioactive releases.	SC-SSC CVS with 99.51% efficient sand filters.	None

Attachment 1 - 2004-2 Table 4.3, H-Canyon Ventilation System Data Collection Table

Notes:

1. MOI – Maximally Exposed Offsite Individual; CW – Collocated Worker (100 meters).

2. A Leak Path Factor (LPF) of 1.0 was used in the consequence assessment (H-Canyon SAR, WSRC-SA-2001-00008, Rev. 9, Section 8.3.2.8.1.1 Release Pathways and Scenarios; Section 8.3.2.8.1.3 Earthquake Induced Release of Process Solution).

3. The unmitigated consequences are calculated by applying a factor of 400 to the mitigated consequences as recorded in the H-Canyon SAR (Table ES-2, H-Canyon Risk Analysis Summary). Analytical experience indicates that crediting the penetration factor of the sand filters gives a source reduction factor of approximately 200 for the MOI. Crediting the stack height release gives another source reduction factor of about 2 for the MOI for a total reduction factor of 400 for the MOI. The source reduction factor for any receptor is the same for the sand filters. However, a release from the stack has varying effects to onsite receptors depending upon the point of the plume touchdown. Typically, the source reduction factor from the stack is higher than 2 for the onsite receptors. Therefore, it is conservative to apply the source reduction factor of 400 to both the MOI and onsite receptor at 100 meters (H-Canyon SAR, Section A.3.3.3 Radiological Hazards and Potential Consequences). As analyzed in the earthquake analysis, the building structure without ventilation significantly mitigates releases.

4. Mitigated dose taken from H-Canyon SAR, Table ES-2, H-Canyon Risk Analysis Summary.

5. TBP is an acronym for: Tri-butyl phosphate.

6. This Safety Class system includes the H-Canyon Exhaust Air Tunnel, Sand Filters 294-H and 294-1H, H-Canyon Supply Fan Interlock for low Canyon Exhaust Air Tunnel vacuum, the Canyon Exhaust Fans and Fan Damper Air System (H-Canyon SAR, Table 8.4-1). Additional SC-SSC includes the H-Canyon Building Structure, the 254-19H/292-H/292-2H Building Structure, and the 254-19H Diesel Generator System.

7. This Safety Significant system includes the 291-H Stack (H-Canyon SAR, Table 8.4-2).

8. The earthquake accident analysis assumes that the active confinement system is inoperable for the first 48 hours after the earthquake. The doses reported in the SAR are based on a ground level, unfiltered release with a Leak Path Factor of 1 for the 48 hour period. The active confinement system is credited for terminating the release after 48 hours. The only confinement mitigation credited is the passive building structure which allows an aerodynamic entrainment & resuspension factor (ARR) of 4E-8/hr (indoors, under static conditions) compared to a higher ARR up to 4E-6/hr for outside applications. Substituting the higher ARR into calculation S-CLC-H-01085 results in an unmitigated dose of 13 rem MOI and 2122 rem CW.

9. The Bounding Accidents credited with an active confinement ventilation system were identified from section 8.3.2 (Dominant Accident Scenario Descriptions), Table 8.3-2 (Summary Table of Controls for H-Canyon and Outside Facilities H-Area Dominant Accidents), and Addendum 3 Table A.3.1-1 in the H-Canyon SAR.

10. Unmitigated dose for the MOI and CW are taken from Calculation S-CLC-H-00845 (Ref. 38 in Chapter 8 of the H-Canyon SAR). Paragraph 8.3.2.2.6.2 of the SAR states that the unmitigated MOI is less than 0.5 rem. Per calculation 845, the unmitigated MOI dose is 0.05 rem. The SAR will be revised to reflect the actual dose from the calculation.

11. Mitigated doses calculated by applying a factor of 400 to the unmitigated doses. Reference note 3.

12. Mitigated dose values taken from H-Canyon SAR, Addendum 3, Table A.3.1-1, Summary Table of Bounding Risks from H-Area Packaged Waste.
13. Mitigated doses for MOI and CW taken from H-Canyon SAR, Table A.1.6-3A and A.1.6-3B for the Dissolving Unit Operation.
14. Since the ventilation system is credited for this Natural Phenomena Event, it will be evaluated as part of the Table 5.1 Gap Analysis.

Attachment 2

DNFSB Recommendation 2004-2 Table 4.3

HB-Line Ventilation System Data Collection Table

ATTACHMENT 2

Confinement Documented Safety Analysis Information										
HB-Line				Hazard Category 2				Performance Expectations		
Bounding Accidents[9]	Type Confinement		Doses Bounding unmitigated / mitigated[1]	Confinement Classification			Safety Function	Functional Requirements	Performance Criteria	Compensatory Measures
	Active	Passive		SC	SS	DID				
Fire-Fifth and Sixth Level Intermediate Fire. (8.3.1.1.1)	X		Unmitigated[2] MOI = 88 rem CW = 1857 rem Mitigated[3] MOI = 0.36 rem CW = 2.6 rem	X[4]	X[7]		Confinement for public protection and collocated worker protection.	Provide a filtered ventilation pathway to mitigate radioactive releases.	SC-SSC CVS with 99.51% efficient sand filters.	None
Fire-Fifth and Sixth Level Full Facility Fire.[11] (8.3.1.1.1)	X		Unmitigated[2] MOI = 63 rem CW = 1,375 rem Mitigated[3] MOI = 2.2 rem CW = 5.5 rem	X[4]	X[7]		Confinement for public protection and collocated worker protection.	Provide a filtered ventilation pathway to mitigate radioactive releases.	SC-SSC CVS with 99.51% efficient sand filters.	None
Fire-Third and Fourth Level Intermediate Fire. (Non-Process Room)[8] (8.3.1.1.2)	X		Unmitigated[2] MOI = 0.8 rem CW = 192 rem Mitigated[3] MOI = 0.68 rem CW = 8.27 rem	X[5]	X[7]		Confinement for public protection and collocated worker protection.	Provide a filtered ventilation pathway to mitigate radioactive releases.	SC-SSC CVS with 99.51% efficient sand filters.	None
Fire-Third and Fourth Level Intermediate Fire. (Process Room)[8] (8.3.1.1.2)	X		Unmitigated[2] MOI = 1.6 rem CW = 107 rem Mitigated[3] MOI = 1.4 rem CW = 4.6 rem	X[5]	X[7]		Confinement for public protection and collocated worker protection.	Provide a filtered ventilation pathway to mitigate radioactive releases.	SC-SSC CVS with 99.51% efficient sand filters.	None

Attachment 2 - 2004-2 Table 4.3, HB-Line Ventilation System Data Collection Table

Confinement Documented Safety Analysis Information										
HB-Line				Hazard Category 2				Performance Expectations		
Bounding Accidents[9]	Type Confinement		Doses Bounding unmitigated / mitigated[1]	Confinement Classification			Safety Function	Functional Requirements	Performance Criteria	Compensatory Measures
	Active	Passive		SC	SS	DID				
Fire-Third and Fourth Level Full Facility Fire.[11] (8.3.1.1.3)	X		Unmitigated[2] MOI = 1.7 rem CW = 291 rem Mitigated[3] MOI = 1.5 rem CW = 12.5 rem	X[5]	X[7]		Confinement for public protection and collocated worker protection.	Provide a filtered ventilation pathway to mitigate radioactive releases.	SC-SSC CVS with 99.51% efficient sand filters.	None
Explosion-Fifth and Sixth Level Hydrogen Explosions. (8.3.1.2.1)	X		Unmitigated[2] MOI = 80 rem CW = 760 rem Mitigated [3]. MOI = 0.2 rem CW = 1.9 rem	X[5]	X[7]		Confinement for public protection and collocated worker protection	Provide a filtered ventilation pathway to mitigate radioactive releases.	SC-SSC CVS with 99.51% efficient sand filters.	None
Explosion-Phase II Resin Explosion. (8.3.1.2.3)	X		Unmitigated[2] MOI = 82 rem CW = 139 rem Mitigated[3] MOI = 0.2 rem CW = 0.34 rem	X[6]	X[7]		Confinement for public protection and collocated worker protection.	Provide a filtered ventilation pathway to mitigate radioactive releases.	SC-SSC CVS with 99.51% efficient sand filters.	None
Explosion, Fire, or Chemical Reaction External to Room 311. (8.3.1.2.5)	X		Unmitigated[2] MOI = 1.7 rem CW = 291 rem Mitigated[3] MOI = 1.5 rem CW = 12.5 rem	X[5]	X[7]		Confinement for public protection and collocated worker protection.	Provide a filtered ventilation pathway to mitigate radioactive releases.	SC-SSC CVS with 99.51% efficient sand filters.	None

Attachment 2 - 2004-2 Table 4.3, HB-Line Ventilation System Data Collection Table

Confinement Documented Safety Analysis Information										
HB-Line				Hazard Category 2				Performance Expectations		
Bounding Accidents[9]	Type Confinement		Doses Bounding unmitigated / mitigated[1]	Confinement Classification			Safety Function	Functional Requirements	Performance Criteria	Compensatory Measures
	Active	Passive		SC	SS	DID				
Earthquake Induced Spill and Resuspension.[11] (8.3.1.6.3.1)	X[10]	X[10]	Unmitigated[2] MOI = 3.6 rem CW = 237 rem Mitigated[3] MOI = 1.4 rem CW = 9.0 rem	X[10]	X[7]		Confinement for public protection and collocated worker protection.	Provide a filtered ventilation pathway after 48 hours to mitigate radioactive releases.	SC-SSC CVS with 99.51% efficient sand filters.	None
Earthquake Induced Fire/Explosion.[11] (8.3.1.6.3.2)	X[10]	X[10]	Unmitigated[2] MOI = 18.6 rem CW = 2,494 rem Mitigated[3] MOI = 3.9 rem CW = 39.9 rem	X[10]	X[7]		Confinement for public protection and collocated worker protection.	Provide a filtered ventilation pathway after 48 hours to mitigate radioactive releases.	SC-SSC CVS with 99.51% efficient sand filters.	None
Fifth and Sixth Level- Intermediate Fire with Secondary Events. (8.3.1.7.1)	X		Unmitigated[2] MOI = 414 rem CW = 2,927 rem Mitigated[3] MOI = 0.58 rem CW = 12.0 rem	X[4]	X[7]		Confinement for public protection and collocated worker protection.	Provide a filtered ventilation pathway to mitigate radioactive releases.	SC-SSC CVS with 99.51% efficient sand filters.	None
Fifth and Sixth Level- Full Facility Fire with Secondary Events. (8.3.1.7.2)	X		Unmitigated[2] MOI = 91 rem CW = 6,050 rem Mitigated[3] MOI = 3.2 rem CW = 24.2 rem	X[4]	X[7]		Confinement for public protection and collocated worker protection.	Provide a filtered ventilation pathway to mitigate radioactive releases.	SC-SSC CVS with 99.51% efficient sand filters.	None

Attachment 2 - 2004-2 Table 4.3, HB-Line Ventilation System Data Collection Table

Notes:

1 MOI – Maximally Exposed Offsite Individual; CW – Collocated Worker (100 meters).

2. The unmitigated consequences are calculated by dividing the mitigated consequences as recorded in the HB-Line SAR (Table ES-1, Risk Analysis Summary) by the leak path factor (LPF), then multiplying the result by two if the predominant release is through the stack. The factor of 2 is omitted if the predominant release is ground level. For unmitigated doses, it is assumed that all material that is made airborne by the event is released outside the facility. This is equivalent to assuming the LPF is unity (1.0). Dividing the mitigated consequences by the LPF is equivalent to setting the LPF for the release to 1.0. Crediting the stack height release gives another source reduction factor of about 2 for the MOI & CW, so the consequences are multiplied by a factor of 2 to account for the unmitigated release being at ground level rather than through the stack. The source reduction factor for any receptor is the same for the sand filters. However, a release from the stack has varying effects to onsite receptors depending upon the point of the plume touchdown. Typically, the source reduction factor from the stack is higher than 2 for the onsite receptors.

   For HB-Line Levels 5/6, specific LPFs used in the development of Table 4.3 (Attachment 2) were derived from calculations S-CLC-H-00661 (Ref. 10) and S-CLC-H-00663 (Ref. 11). The LPFs associated with the 5th and 6th Level fires were derived from Table 3, Summary of LPF Values (Ref. 10). These LPF values take into account the fraction of material that bypasses the sand filter during various events. One possible way the air flow patterns could be altered is by pressurizing the interior of the building due to "air expansion" from heating due to a fire. Such air expansion effects can force building air (and any small, respirable-sized radioactive particles entrained in this air) out of the building through cracks (such as around doors).

   For HB-Line Levels 3/4, specific LPFs used in the development of Table 4.3 (Attachment 2) were derived from calculation S-CLC-H-00794, Table 4, Summary of Radiological Source Term Equation Values (MOI), (Ref. 12).

   For the explosion events, if some of the material is released through openings in the building (i.e., a LPF of <1), then the remainder of the material is released through the sand filters that have a LPF of 0.0049, consistent with the sand filter efficiency value of 0.9951. Since the earthquake events involve releases from all levels, a single LPF was synthesized to adjust the mitigated consequences from these events to unmitigated consequences. Even without mitigation by the sand filter for the earthquake events, LPFs are <1.0 due to the passive containment of the building including the tornado dampers on the ventilation inlet.

3. Mitigated doses for MOI and CW taken from HB-Line SAR (WSRC-SA-2001-00009 Rev. 5), Table ES-1, Risk Analysis Summary.

4. This Safety Class system includes the HB-Line Building Structure (outside walls, exterior security doors, roofs, and exterior ventilation tunnel), H-Canyon Exhaust System (includes H-Canyon Exhaust Air Tunnel), Ventilation Interlocks (building vacuum), Tornado Dampers, Sand Filters, and the 254-19H Diesel Generator System..

5. This Safety Class System includes the H-Canyon Exhaust System (includes H-Canyon Exhaust Air Tunnel), the Sand Filters, the HB-Line Building Structure, and the 254-19H Diesel Generator System..

6. This Safety Class System includes the HB-Line Building Structure (outside walls, exterior security doors, roofs, and exterior ventilation tunnel), H-Canyon Exhaust System (includes the H-Canyon Exhaust Air Tunnel), Sand Filters, and the 254-19H Diesel Generator System..

7. This Safety Significant system includes the 291-H Stack.

8. This same accident scenario has been identified for both the "process room" and for "non-process room" locations in the HB-Line SAR, Table ES-1, Risk Analysis Summary. Each accident scenario has a unique unmitigated and mitigated MOI and CW dose. Hazard Analysis Event 311-2 (non-process room) assumes that a fire starts in Rooms 311, 311A, or Room 311C, or in an area exterior to the room. There is no process inventory in Rooms 311, 311A, and 311C. For Event 311-2, the only radiological contribution to the source term is from radioactive contamination on the surface of walls and floors, the residual radioactive material in the process cabinets and radioactive waste that is stored on the Third Level. Hazard Analysis Event 410N-2 (process room) assumes that the fire either starts in the room, or starts in an area exterior to the room, and grows to involve the room. This process area fire grows to encompass the entire volume of Room 410N including Tanks JT-71, JT-72, and RT-20. Worst case conditions for both offsite and onsite consequences assume the tanks fail and release their contents to the floor (HB-Line SAR, Section 8.3.1.1.2, Release Pathways and Scenarios).

9. The Bounding Accidents credited with an active confinement ventilation system were identified from Section 8.3.1, Dominant Accidents and Table 8.3-2, Summary Table of Controls for HB-Line Dominant Accidents, in the HB-Line SAR.

10. The earthquake accident analysis assumes that the active confinement system is inoperable for the first 48 hours after the earthquake. The active confinement system is credited for mitigation after 48 hours.

11. Since the ventilation system is credited for this Natural Phenomena Event, it will be evaluated as part of the Table 5.1 Gap Analysis.

Attachment 3

DNFSB Recommendation 2004-2 Table 5.1

H Canyon Ventilation System Performance Criteria

Attachment 3 - 2004-2 Table 5.1, H-Canyon Ventilation System Performance Criteria

Evaluation Criteria	Discussion	Reference
	1 - Ventilation System – General Criteria	
Pressure differential should be maintained between zones and atmosphere.	Confinement is accomplished by maintaining positive static pressure in clean areas, atmospheric pressure in areas with low potential for contamination and a slight vacuum in areas with high contamination potential. Building differential pressure instrumentation is installed to monitor and trend strategic locations to ensure proper facility air balance. The instrumentation readings are documented by facility operations on a periodic basis on round sheet procedures. Hot and Warm Canyon to atmosphere differential pressure instrumentation in the Control Room provides a remote confirmation that the Canyon exhaust tunnel to atmosphere differential pressure TSR limit is being maintained. Gap Analysis A discretionary gap has been identified. The active ventilation system will not maintain pressure differential for all events. The Safety Analysis Report assumes that the airflow will be stagnant for up to 48 hours following a DBE. See later discussion regarding system performance during seismic and tornado events. A pressure differential is maintained during normal operation. Standby fans are designed to come on line, as required, if the vacuum in the Exhaust Tunnel drops below a setpoint higher than the limit of 0.65 inch WC activating alarms in Building 221-H Control Room. To ensure a negative pressure is maintained, if the vacuum drops below the limit setpoint, the Canyon Supply Fans in Building 221-H are automatically shutdown.	DOE-HNBK-1169 (2.2.9) ASHRAE Design Guide
Materials of construction should be appropriate for normal, abnormal and accident conditions.	Materials of construction for the H-Canyon confinement walls and ventilation duct are reinforced concrete and stainless steel. Gasket material is neoprene. Exhaust fan material subject to the air stream is stainless steel. All materials of constriction are appropriate for normal, abnormal and accident condition. The H-Canyon confinement walls, exhaust tunnel, Sand Filters and 292-H Fan house concrete structures are inspected and assessed for degradation through the Structural Integrity Program. Gap Analysis None. Due to the materials of construction and inspections performed through the Structural Integrity Program, H-Canyon ventilation can perform its intended function during normal, abnormal, and accident conditions.	DOE-HNBK-1169 (2.2.9) ASME AG-1
Exhaust system should withstand anticipated normal, abnormal and accident system conditions and maintain confinement integrity.	The active confinement ventilation system will remain intact and serviceable under accident conditions. The exhaust fans and emergency diesel generators are located in separate buildings from H-Canyon. Exhaust fans are housed in a separate hardened structure from H-Canyon. Ventilation system components will be capable of withstanding differential pressures, heat, moisture, and stress of the most serious accident predicted for the facility with minimum damage and loss of integrity and they will remain operable long enough to satisfy system objectives. Gap Analysis A discretionary gap has been identified. The active ventilation system will not maintain pressure differential for all events. See later discussion for seismic and wind resistance.	DOE-HNBK-1169 (2.4) ASHRAE Design Guide

Attachment 3 - 2004-2 Table 5.1, H-Canyon Ventilation System Performance Criteria

Evaluation Criteria	Discussion	Reference
Confinement ventilation systems shall have appropriate filtration to minimize release.	Sand filters (294-H and 294-1H), rather than HEPA filters, are used for the Hot and Warm Canyons. Exhaust fans in Building 292-H pull the air through the sand filters (Building 294-H and 294-1H), and discharge it to the stack. The sand filters are constructed of layers of progressively smaller aggregate, starting with coarse stone on the bottom and ending with fine sand on the top. Airflow is out the top. The two sand filters operate in parallel. The Safety Analysis Report assumes that the sand filters are 99.51% efficient in removing any radioactive particulates that are airborne in the canyon exhaust air stream. The rated capacity of the H-Canyon sand filters is 205,000 cfm and the actual flow rate through the sand filters is approximately 122.000 cfm. The sand filter dp is not measured directly across the media bed but the difference between the inlet plenum and the exhaust tunnel. The measured sand filter dp is about 10" WC. The H-Canyon exhaust tunnel vacuum pressure reading and the sand filter periodic aerosol testing (at typical flowrates) are credited to monitor filter performance. Differential pressure readings and total system airflow are also trended. Gap Analysis None. Aerosol testing of the normal airflow volume is performed every 18 months. Test results have indicated a 99.9% or greater efficiency for the past 10 years.	ASME AG-1 DOE-HDBK-1169 (2.2.1)
2 - Ventilation System – Instrumentation & Control		
Provide system status instrumentation and/or alarms.	H-Canyon confinement ventilation system instrumentation provides both local and remote (main control room) indication of system status. Differential pressure gages provide means of monitoring confinement areas and filters are installed in the system to determine if they are functioning properly. Facility operators monitor facility differential pressures by recording them on round sheets. Normal operating ranges are provided so the operator is alerted to abnormal conditions. Round Sheet instructions require the operators to notify the Shift Operation Manager of abnormal conditions. Status of exhaust fans and Diesel Generators are monitored routinely. Gap Analysis None. Instrumentation is appropriate to provide local and remote indication of system status. Additionally, Round Sheet system status instructions provide daily surveillance of instrument readings. Although the remote system status alarm in the H-Canyon control room is not credited, multiple indications are available to indicate significant system upsets.	ASME AG-1 DOE-HNBK-1169 ASHRAE Design Guide (Section 4)
Interlock supply and exhaust fans to prevent positive pressure differential.	If the vacuum in the canyon exhaust tunnel drops, the canyon supply fans will be de-energized and their discharge dampers will fail open (credited interlock). This is to prevent pressurizing the canyon or setting favorable conditions for an air reversal. Additionally, three of the four exhaust fans are normally in operation with the fourth fan in auto-standby and set to start if the vacuum in the canyon exhaust tunnel drops. A Functional Test is required on the H-Canyon Exhaust Tunnel Low Vacuum/Canyon Supply Fans Interlock. Additionally, a Functional Test is performed on the H-Canyon Exhaust Tunnel Low Vacuum/Auto-Start Standby Fan Interlock for all four Canyon Exhaust Fans. Gap Analysis None. The H-Canyon supply and exhaust fan interlock prevents positive pressure differential.	DOE-HNBK-1169 ASHRAE Design Guide (Section 4)

Attachment 3 - 2004-2 Table 5.1, H-Canyon Ventilation System Performance Criteria

Evaluation Criteria	Discussion	Reference
Post accident indication of filter break-through.	The sand filters are seismically qualified. Any localized filter break-through would be identified by the differential pressure instrumentation or by the stack air activity monitoring system. The non-credited Stack monitor instrumentation provides a layer of DiD. The H-Canyon exhaust is monitored and alarmed for elevated levels of alpha, beta, and gamma radiation. The sand filter differential pressure is taken from an inlet reference and a discharge tunnel reference. Gap Analysis None. No credit is taken in the SAR for a functional post accident indication of sand filter breakthrough. The sand filter is a robust structure that is designed to remain functional during accidents for which it is credited. Filter pressure differential instrumentation and the stack monitoring system are not credited, but provide multiple means for detecting post-accident filter break-through. Ports are available that can be accessed to provide collection of air samples to monitor radiological conditions.	DNFSB Tech-34
Reliability of control system to maintain confinement function under normal, abnormal and accident conditions.	Monitoring of the ventilation system alarms is performed by Operations Personnel in the continuously manned H-Canyon Control Room. Operation of the H-Canyon Ventilation system is controlled by operating procedures. System control is maintained during normal conditions using Normal Operating Procedures (NOP) abnormal and accident conditions using Abnormal Operating Procedures (AOP), Emergency Operating Procedures (EOP), and Alarm Response Procedures, which govern initial alarm validation and corrective actions in response to control room alarms for safety systems. Credited instrument reliability is monitored under the Installed Process Instrumentation (IPI) Program where the instruments are calibrated periodically per TSR requirements and the interlocks are functionally tested by procedure on a periodic basis per TSR requirements. The canyon exhaust fans, the emergency diesel generators, and their controls are located in separate, dedicated, hardened buildings which are also separate and remote from H-Canyon. Redundancy exists in that there are four canyon exhaust fans with individual control systems and two emergency diesel generators with individual control systems. Gap Analysis None. The combination of continuously manned control room operators and normal and abnormal operating procedures maintain system function under normal, abnormal and accident conditions.	DOE-HNBK-1169 (2.4)
Control components should fail safe.	Safety class/emergency loads will be connected to the Safety Class Emergency Diesel Generator via automatic transfer switches (ATS's). The emergency generators start automatically and provide power through the ATS's upon loss of normal power. Fan dampers are located on the inlet and discharge sides of the Canyon exhaust fans. Upon loss of power or instrument air, the discharge dampers on the canyon supply fans fail in the open position and the discharge dampers on the Canyon exhaust fans fail in the as-is position. The credited Fan Damper Air System ensures that the Exhaust Fans can perform their safety function upon loss of site power and the normal Instrument Air supply. Four supply fans (two Hot Canyon and two Warm Canyon) supply air to the Hot and Warm Canyons. Each canyon runs one fan with the other fan in manual standby. If a fan fails, the operating supply fan on the opposite Canyon will be de-energized. Fans must be run in pairs and are electrically interlocked. If the vacuum in the canyon exhaust tunnel drops, the canyon supply fans will be de-energized and their discharge dampers will fail open. This is to prevent pressurizing the canyon, or setting favorable conditions for an air reversal. Failure of the supply fan interlock will cause the supply fans to stop. If the control component/system fails during operation, it would fail in such a manner that the system in most cases is placed in the safest configuration possible. Gap Analysis None. Failure of a control component/system would not prevent the ventilation system from performing its intended function.	DOE-HNBK-1169 (2.4)

Attachment 3 - 2004-2 Table 5.1, H-Canyon Ventilation System Performance Criteria

Evaluation Criteria	Discussion	Reference
	3 - Resistance to Internal Events – Fire	
Confinement ventilation systems should withstand credible fire events and be available to operate and maintain confinement.	In case of a facility fire, with heat damaging effects, the exhaust fans are located in the 292-H Fan House and are protected from the effects of fire by physical separation and fire detection. The exhaust ductwork is either concrete or heavy gauge steel and is inherently fire resistant. The fire resistant sand filter media provides a large heat sink mitigating the effect of hot air and gasses on fan performance without becoming inoperative. Exhaust fans are physically separated and redundancy is provided in case of a fan motor fire. Gap Analysis None. Through redundancy, physical separation and fire detection systems, the confinement ventilation system will withstand credible fire events and will be available to operate and maintain confinement.	DOE-HNBK-1169 (10.1) DOE-STD-1066
Confinement ventilation systems should not propagate spread of fire.	The physical separation of the 292-H Fan House and 254-19H Diesel Generator Buildings from the H-Canyon structure helps prevent ventilation system fire propagation. The once through ventilation system provides a pathway out of the H-Canyon from the Hot and Warm Canyon sections through the non-combustible sand filters and exhaust stack. Gap Analysis None. Physical separation and once through airflow design help prevent propagation of fire.	DOE-HNBK-1169 (10.1) DOE-STD-1066
	4 - Resistance to External Events – Natural Phenomena – Seismic	
Confinement ventilation systems should safely withstand earthquakes.	The H-Canyon is a SC Class I explosion proof Maximum Resistance Construction structure. A structural analysis of the H-Canyon and its ability to withstand a DBE level earthquake concluded that H-Canyon will withstand the postulated PC-3 seismic ground motion. The stack liner is assumed to collapse in the 0.04g earthquake. The collapse of the stack liner will not affect the concrete stack. For conservatism, the brick liner collapse is assumed to block the exhaust airflow in the stack. To compensate for the loss of airflow through the stack, earthquake response procedures have been developed to remove the access doors from each fan resulting in a ground level filtered release. Except for the stack liner, the canyon exhaust system will withstand a DBE. The canyon exhaust system is conservatively assumed to be unavailable for up to 48 hours to remove rubble from the exhaust stack or open the stack plenum ports. Safety class/emergency loads will be connected to the Safety Class Emergency Diesel Generator via SC automatic transfer switches (ATS's). The emergency generators start automatically and provide power through the ATS's upon loss of normal power. The exhaust fans and emergency generators will withstand a DBE. Gap Analysis A discretionary gap has been identified. The H-Canyon stack liner is assumed to collapse in a 0.04g earthquake. The ventilation system is expected to withstand a DBE other than the stack liner. The Safety Analysis Report assumes that the airflow will be stagnant for up to 48 hours. Due to the H-Canyon passive building confinement, radiological releases will not exceed the consequence guidelines for the period of time the system is inoperable. Options have been identified for modification or replacement of the stack/stack liner to prevent any delay in system operation during a DBE. Upgrades are currently included in the multi-year plan for facility infrastructure upgrades. The current SAR is being revised per current EM Interim Guidance. This revision will consider revising the earthquake accident analysis to reduce/eliminate the assumed time that the active ventilation system is unavailable after an earthquake.	ASME AG-1 AA DOE 0420.1B DOE-HNBK-1169 (9.2)

Attachment 3 - 2004-2 Table 5.1, H-Canyon Ventilation System Performance Criteria

Evaluation Criteria	Discussion	Reference
	5 - Resistance to External Events – Natural Phenomena – Tornado/Wind	
Confinement ventilation systems should safely withstand tornado depressurization.	The canyon will withstand a design basis tornado, so there are no source term spills inside the canyon and any unfiltered air release from the canyon will not exceed evaluation guides. The Canyon Supply system does not have tornado dampers, but backdraft dampers are installed in the main supply ducts that provide defense-in-depth but are not credited in the SAR for tornado events. Canyon tanks are robust and vented which will resist any collapse from tornado depressurization. Gap Analysis None. The canyon will withstand a design basis tornado, so there are no source term spills inside the canyon and any unfiltered air release from the canyon will not exceed evaluation guides. Non-credited backdraft dampers provide DiD but are not credited in the SAR for tornado events. See discussion below regarding stack failure in a design basis tornado.	DOE 0420.1B DOE-HNBK-1169 (9.2)
Confinement ventilation systems should withstand design wind effects on system performance.	Calculation T-CLC-H-00312 has shown that in winds stronger than PC-2 but less than PC-3 levels, the concrete 291-H Stack will fail at about the 68-foot level. If the stack fails at the 68-foot level, it will not hit any part of the H-Canyon Ventilation System such that it will cause a complete loss of the ventilation system. Calculation T-CLC-H-00799 determined that the stack falling from the 68-foot height will collapse part of the 292-H roof, but will not affect the ventilation fans, the air tunnels under the 292-H Building, the 292-2H fan house, or the 294-H sand filter. The canyon will withstand a design basis tornado, so there are no source term spills inside the canyon and any unfiltered air release from the canyon will not exceed evaluation guides. Gap Analysis A discretionary gap has been identified. The Canyon and HBL structures will withstand a design basis tornado or wind event, so there are no releases inside the structure and no accident event recognized in the SAR. However, the stack will fail in a design basis tornado. Options have been identified for modification or replacement of the stack/stack liner to prevent stack failure. Upgrades are currently included in the multi-year plan for facility infrastructure upgrades.	DOE 0420.1B DOE-HNBK-1169 (9.2)
	6- Range Fires/Dust Storms	
Administrative controls should be established to protect confinement ventilation systems from barrier threatening events.	Wildland Fire-The H-Canyon structure, and the Canyon Exhaust System exposed hardened structures, the 294-H and 294-1H Sand Filters, the 292-H Fan House, and the 254-19H Diesel Generator Buildings provide protection from flaming brands and the wildland fire heat wave. Programmatic controls that will mitigate an external fire are the Emergency Preparedness and Emergency Response Programs for the facility worker, co-located worker and public receptors. Specific preventive actions include the SRS Forest Service Management Program, which consists of controlled burns and mechanical thinning of the underbrush to limit or prevent a wildland fire spreading out of control. The SRS Forestry Department is responsible for fire fighting efforts in regards to wildland fires. The SRS Fire Department will direct extinguishing efforts. The Configuration Control Program is credited to assure that any design changes to credited equipment or structures does not compromise the safety function. Gap Analysis None. Administrative controls are sufficient to protect confinement ventilation systems from barrier threatening events.	DOE O420.1B
	7 - Testability	

Attachment 3 - 2004-2 Table 5.1, H-Canyon Ventilation System Performance Criteria

Evaluation Criteria	Discussion	Reference
Design supports the periodic inspection & testing of filters and housing, and tests & inspections are conducted periodically.	The sand filter design provides injection ports in the inlet and outlet tunnels to allow test connections for aerosol testing. In-place leak testing is performed at scheduled intervals for installed sand filter systems and checked periodically to verify efficiency. A Surveillance Requirement is required to be performed periodically to verify the efficiencies of the Sand Filters. The design supports conduct of aerosol and visual testing. The design provides for personnel access to inspect the tunnel. Gap Analysis None. The ventilation system design provides for periodic testing.	DOE-HNBK-1169 (2.3.8) ASME AG-1 ASME N510
Instrumentation required to support system operability is calibrated.	Installed instrumentation is tracked and trended. The Measuring and Test Equipment (M&TE) program is programmatically controlled. Controls include traceability of TSR-related instruments, calibration frequencies, and evaluation of TSR-related items found outside of calibration tolerances. Gap Analysis None. Instrumentation required to support system operability is calibrated.	DOE-HNBK-1169 (2.3.8)
Integrated system performance testing is specified and performed.	Surveillance test procedures are periodically used to verify credited interlock performance and to verify ability of emergency diesel generators to operate if normal power is lost. Gap Analysis None. Integrated system performance testing is adequate to insure system operation.	DOE-HNBK-1169 (2.3.8)
8 – Maintenance		
Filter service life program should be established.	Sand filter performance monitoring includes differential pressure monitoring, efficiency testing, visual inspection and radiological profiles. There are no HEPA filters in the credited Canyon exhaust system. Any loss of filter performance would be very gradual. Trends indicate no significant degradation in filter performance. Gap Analysis None. A filter service life program has been established.	DOE-HNBK-1169 (3.1 & App C)
9 - Single Failure		
Failure of one component (equipment or control) shall not affect continuous operation.	Air is exhausted from the canyons by four fans located in Building 292-H. Three fans are normally in operation with the fourth fan in auto-standby and set to start if the vacuum in the canyon exhaust tunnel drops. A single exhaust fan will maintain canyon confinement. Safety class/emergency loads are transferred to the Emergency Diesel Generator via automatic transfer switches (ATS's). The emergency generators start automatically and provide redundant power through the ATS's upon loss of normal power. Two generators are provided for redundancy to provide emergency independent control power. Gap Analysis None. Component Redundancy is sufficient to allow continuous operation. See discussion above regarding system performance in a seismic or tornado event.	DOE O 420.1B, Facility Safety, Chapter I, Sec. 2.b(8)

Attachment 3 - 2004-2 Table 5.1, H-Canyon Ventilation System Performance Criteria

Evaluation Criteria	Discussion	Reference
Automatic backup electrical power shall be provided to all critical instruments and equipment required to operate and monitor the confinement ventilation system.	Safety class/emergency loads will be transferred to the Safety Class Emergency Diesel Generator via automatic transfer switches (ATS's). The emergency generators start automatically and provide power through the ATS's upon loss of normal power. The 254-19H Emergency Diesel Generator Electrical Distribution System is required to provide power to the H-Canyon Exhaust Fans designated as SC. This system includes two SC Standby Diesel Generators and provides electrical power to the 292-H Fan House and 254-19H Facility when normal power is lost. The 254-19H Building Structure is an SC design feature and houses the two generators and equipment required for the operability of the 254-19H Electrical Distribution System and the Canyon Exhaust Fans. Tunnel vacuum alarms and interlocks do not have emergency back-up power, but are designed to fail safe upon loss of power. Therefore, if the Canyon supply fan interlock circuit loses power, the supply fans will shut down. Also, if the Canyon exhaust auto-start interlock pressure switches lose power, the fan in the auto position will start. There is a non-credited exhaust low vacuum alarm in the H-Canyon control room. This alarm notifies the Control Room operators that a credited exhaust fan auto start interlock has been activated. The alarm panels in the 254-19H Building are supplied with emergency power from the credited 125 VDC batteries. The main control room alarm is connected to backup power. <u>Gap Analysis</u> None. The 254-19H Emergency Diesel Generators provide redundant backup electrical power to critical instruments and equipment required to operate and monitor the confinement ventilation system.	DOE-HNBK-1169 (2.2.7)
10 - Other Credited Functional Requirements		
Address any specific functional requirements for the confinement ventilation system (beyond the scope of those above) credited in the DSA.	None	10 CFR 830, Subpart B

Attachment 4

DNFSB 2004-2 Recommendation Table 5.1

HB-Line Ventilation System Performance Criteria

Attachment 4 - 2004-2 Table 5.1, HB-Line Ventilation System Performance Criteria

Evaluation Criteria	Discussion	Reference
	1 - Ventilation System – General Criteria	
Pressure differential should be maintained between zones and atmosphere.	The HB-Line internal ventilation system is not credited during accident analyses for the MOI or CW. All radiologically controlled portions of the HB-Line Facility are maintained lower than atmospheric pressure so that any air leakage is into the building and does not release any radioactive material during non-accident conditions. Except for temporary pressurization by fires and lack of discharge during earthquake-induced stack liner collapse, a negative pressure can be maintained on the HB-Line from the H-Canyon Ventilation System even if all of the HB-Line exhaust fans are not operating during accident conditions. All exhaust air from HB-Line is passed through the SC credited H-Canyon exhaust tunnel, Sand Filters, and 195-foot stack. For a discussion of the H-Canyon active confinement ventilation system for this Evaluation Criteria, reference Attachment 1. During non-accident conditions, the non-credited HB-Line ventilation system maintains a constant flow of air from clean areas to areas that have a higher potential for contamination. Airflow and differential pressures are such that the lowest pressures are in the cabinets and gloveboxes, followed by higher pressure in operations and maintenance areas, and even higher pressures in access corridors, airlocks, and control rooms. Gap Analysis: A discretionary gap has been identified. The active ventilation system will not maintain pressure differential for all events. The Safety Class H-Canyon active confinement ventilation system is shared with HB-Line. See attachment 1 for discussion of H-Canyon exhaust system in a seismic and tornado event. See later discussion regarding performance in fire events.	DOE-HNBK-1169 (2.2.9) ASHRAE Design Guide
Materials of construction should be appropriate for normal, abnormal and accident conditions.	The exterior walls of HB-Line levels 5/6 are reinforced concrete. There can be some wall movement during seismic events, so areas of expected movement are protected by neoprene expansion joints. Levels 5/6 of HB-Line are connected to the H-Canyon ventilation system by a seismically-qualified ventilation duct. Materials of construction for the HB-Line Ventilation duct are reinforced concrete and stainless steel. Levels 3/4 of HB-Line are physically located inside the H-Canyon walls. Tornado dampers are constructed of epoxy-coated carbon steel. Materials of construction are appropriate for normal, abnormal and accident condition. All exhaust air from HB-Line is passed through the SC credited H-Canyon exhaust tunnel, Sand Filters, and 195-foot stack. For a discussion of the H-Canyon active confinement ventilation system for this Evaluation Criteria, reference Attachment 1. Gap Analysis None. All materials of construction are appropriate for normal, abnormal and accident conditions.	DOE-HNBK-1169 (2.2.9) ASME AG-1
Exhaust system should withstand anticipated normal, abnormal and accident system conditions and maintain confinement integrity.	Credited confinement walls (including the tornado dampers) and ducts will withstand all DBAs. The HB-Line internal ventilation systems are not credited for this Evaluation Criteria. All exhaust air from HB-Line is passed through the SC credited H-Canyon exhaust tunnel, Sand Filters, and 195-foot stack. For a discussion of the H-Canyon active confinement ventilation system for this Evaluation Criteria, reference Attachment 1. Gap Analysis A discretionary gap has been identified. The active ventilation system will not maintain pressure differential for all events. The Safety Class H-Canyon active confinement ventilation system is shared with HB-Line. The H-Canyon Exhaust System can maintain HB-Line building vacuum upon HB-Line ventilation shutdown. The Sand Filter and the H-Canyon Exhaust System are remote from the facility and are not challenged by any of the HB-Line Table 4.3 Bounding Accidents except a DBE when the system is assumed to be lost for 48 hours. See later discussion of fire events.	DOE-HNBK-1169 (2.4) ASHRAE Design Guide

Attachment 4 - 2004-2 Table 5.1, HB-Line Ventilation System Performance Criteria

Evaluation Criteria	Discussion	Reference
Confinement ventilation systems shall have appropriate filtration to minimize release.	The HB-Line ventilation filters are not credited for this Evaluation Criteria. The non-credited HB-Line HEPA filters are located on the glove box exhaust, which discharges directly to a duct connected to the canyon exhaust tunnel, and provides filtration in some but not all accidents scenarios. The required filter flow capacity or nominal flow rates at maximum differential pressure (dp) are identified in M-SPP-G-00243 for the given sizes. The most common HEPA filters sizes are: (1) 12" x 12" x 5-7/8" rated at 125 cfm @ 1.3" WC dp, and (2) 24" x 24" x 11-1/2" rated at 1000 cfm @ 1.0" WC dp. The actual airflow through a 24" x 24" x 11-1/2 HEPA filter range from about 500 cfm (Phase 1) to about 550 cfm (Phase 2/3). The actual airflow through the glovebox HEPA filters is typically 90 cfm. The credited H-Canyon sand filters provide filtration in all HB-Line accident events. All exhaust air from both Levels 3/4 and Levels 5/6 of HB-Line is passed through the credited SC H-Canyon exhaust tunnel, Sand Filters, and 195-foot stack. For a discussion of the H-Canyon Ventilation System for this Evaluation Criteria, reference Attachment 1. Gap Analysis None. The Safety Class H-Canyon active confinement ventilation system is shared with HB-Line. Crediting the HBL glove box exhaust filters would not provide significant consequence reduction.	ASME AG-1 DOE-HDBK-1169 (2.2.1)
2 - Ventilation System – Instrumentation & Control		
Provide system status instrumentation and/or alarms.	Alarm indication is provided in the control room for the credited interlock that shuts off the Levels 5/6 supply fans if the pressure inside Levels 5/6 exceeds atmospheric pressure. System status instrumentation and/or alarms for the HB-Line internal ventilation system are not credited for this Evaluation Criteria. All exhaust air from HB-Line is passed through the credited SC H-Canyon exhaust tunnel, Sand Filters, and 195-foot stack, except for temporary pressurization during some accidents. For a discussion of the H-Canyon active confinement ventilation system for this Evaluation Criteria, reference Attachment 1. Gap Analysis None. The Safety Class H-Canyon active confinement ventilation system is shared with HB-Line.	ASME AG-1 DOE-HNBK-1169 ASHRAE Design Guide (Section 4)
Interlock supply and exhaust fans to prevent positive pressure differential.	A credited interlock shuts off the Levels 5/6 supply fans if the pressure inside Levels 5/6 exceeds atmospheric pressure. No other interlocks are credited to function during accident conditions. All exhaust air from HB-Line is passed through the SC credited H-Canyon exhaust tunnel, Sand Filters, and 195-foot stack except during temporary pressurization during accidents. For a discussion of the H-Canyon active confinement ventilation system for this Evaluation Criteria, reference Attachment 1. Gap Analysis None. The credited components maintain accident consequences within evaluation guidelines.	DOE-HNBK-1169 ASHRAE Design Guide (Section 4)
Post accident indication of filter break-through.	The HB-Line filtration system is not credited for this Evaluation Criteria. All exhaust air from HB-Line is passed through the SC credited H-Canyon exhaust tunnel, Sand Filters, and 195-foot stack except for temporary leakage through building openings during some accidents. For a discussion of the H-Canyon active confinement ventilation system for this Evaluation Criteria, reference Attachment 1. Gap Analysis None. The Safety Class H-Canyon active confinement ventilation system is shared with HB-Line.	DNFSB Tech-34

Attachment 4 - 2004-2 Table 5.1, HB-Line Ventilation System Performance Criteria

Evaluation Criteria	Discussion	Reference
Reliability of control system to maintain confinement function under normal, abnormal and accident conditions.	The interlock that shuts down the Levels 5/6 supply fans if the building pressurizes is classified as Safety Class. This interlock either survives DBAs or fails safely during a DBA. Monitoring of this interlock alarm is performed by Operations Personnel in the continuously manned Control Room. Alarm Response Procedures govern initial alarm validation and corrective actions. Credited instrument reliability is monitored under the Installed Process Instrumentation (IPI) Program where the instruments are calibrated periodically per TSR requirements and the interlocks are functionally tested by procedure on a periodic basis per TSR requirements. Otherwise, the reliability of the HB-Line ventilation system control system is not credited for this Evaluation Criteria. All exhaust air from HB-Line is passed through the SC credited H-Canyon exhaust tunnel, Sand Filters, and 195-foot stack. For a discussion of the H-Canyon active confinement ventilation system for this Evaluation Criteria, reference Attachment 1. Gap Analysis None. The Safety Class H-Canyon active confinement ventilation system is shared with HB-Line.	DOE-HNBK-1169 (2.4)
Control components should fail safe.	The interlock that shuts down the Levels 5/6 supply fans if the building pressurizes fails safe. Other HB-Line control components are not credited for this Evaluation Criteria. All exhaust air from HB-Line is passed through the SC credited H-Canyon exhaust tunnel, Sand Filters, and 195-foot stack. For a discussion of the H-Canyon active confinement ventilation system for this Evaluation Criteria, reference Attachment 1. Gap Analysis None. The Safety Class H-Canyon active confinement ventilation system is shared with HB-Line.	DOE-HNBK-1169 (2.4)
3 - Resistance to Internal Events – Fire		
Confinement ventilation systems should withstand credible fire events and be available to operate and maintain confinement.	The SAR describes temporary pressurization by fires. Due to passive confinement features, accident consequences will not exceed evaluation guidelines. The Levels 5/6 HB-Line interlock that shuts down the Levels 5/6 supply fans either survives the DBAs or fails safely. Other HB-Line control components are not credited for this Evaluation Criteria. Most exhaust air from HB-Line is passed through the SC credited H-Canyon exhaust tunnel, Sand Filters, and 195-foot stack. For a discussion of the H-Canyon active confinement ventilation system for this Evaluation Criteria, reference Attachment 1. Gap Analysis A discretionary gap has been identified. Some temporary release of unfiltered air is anticipated during fire events due to release of large volumes of Halon and abrupt expansion of air due to heat input. However, passive confinement features keep consequences well below evaluation guidelines. The Safety Class H-Canyon active confinement ventilation system is shared with HB-Line.	DOE-HNBK-1169 (10.1) DOE-STD-1066
Confinement ventilation systems should not propagate spread of fire.	HB-Line control components are not credited for this Evaluation Criteria. Passive confinement systems (walls, ducts) are passive to fire. Except for temporary pressurization during fires, all exhaust air from HB-Line is passed through the SC credited H-Canyon exhaust tunnel, Sand Filters, and 195-foot stack. For a discussion of the H-Canyon active confinement ventilation system for this Evaluation Criteria, reference Attachment 1. The HB-Line Ventilation System is a once-through design, and hot gasses would be moved away from fires, not channeled to other areas, if a fire occurs. Gap Analysis None. The Safety Class H-Canyon active confinement ventilation system is shared with HB-Line.	DOE-HNBK-1169 (10.1) DOE-STD-1066

Attachment 4 - 2004-2 Table 5.1, HB-Line Ventilation System Performance Criteria

Evaluation Criteria	Discussion	Reference
	4 - Resistance to External Events – Natural Phenomena – Seismic	
Confinement ventilation systems should safely withstand earthquakes.	The HB-Line Building Structure is seismically qualified and will withstand the DBE with only minor cracking. The Fifth and Sixth Level hardened reinforced concrete structure is supported by the 221-H Building. The Fifth and Sixth Level structure is classified as a Maximum Resistance structure designed to withstand loads imposed by DBAs, within allowable stress limits specified by code, occupant safety, continued function, and high confidence confinement. Neoprene rubber seals are provided for locations where gaps may appear during seismic events. The expansion joint seals remain intact and there are no significant holes in the building. The tornado dampers will survive the seismic event and operate normally (i.e., the dampers will close upon loss of exhaust on HB-Line). All exhaust air from HB-Line is passed through the SC credited H-Canyon exhaust tunnel, Sand Filters, and 195-foot stack except for minor wind-induced leakage until H-Canyon restores ventilation flow around the stack. For a discussion of the H-Canyon active confinement ventilation system for this Evaluation Criteria, reference Attachment 1. Gap Analysis A discretionary gap has been identified. The Safety Class H-Canyon active confinement ventilation system is shared with HB-Line. This system is assumed to be lost for 48 hours after a DBE. Due to the passive building confinement, releases will not exceed consequence guidelines. For a discussion of the H-Canyon active confinement ventilation system for this Evaluation Criteria, reference Attachment 1.	ASME AG-1 AA DOE 0420.1B DOE-HNBK-1169 (9.2)
	5 - Resistance to External Events – Natural Phenomena – Tornado/Wind	
Confinement ventilation systems should safely withstand tornado depressurization.	The SC HB-Line tornado dampers are counterbalanced and close whenever the pressure inside the building is greater than, or equal to, the pressure outside the building. Should the HB-Line Building (Fifth and Sixth Levels) become pressurized, the tornado dampers will close rapidly and prevent HB-Line depressurization. The tornado dampers prevent all but an insignificant outflow of radioactive material though the ventilation supply ducts. The HB-Line Building Vacuum Interlock trips both HB-Line air supply fans in the event that the HB-Line Building Structure (Fifth and Sixth Levels) becomes pressurized with respect to the atmosphere. The SC credited H-Canyon Exhaust System pulls air from the Fifth and Sixth Level, through the H-Canyon Exhaust Air Tunnel and exhausts through the Sand Filter and the 291-H Stack. For a discussion of the H-Canyon active confinement ventilation system for this Evaluation Criteria, reference Attachment 1. Gap Analysis None. The Safety Class H-Canyon active confinement ventilation system is shared with HB-Line. This system continues to operate during a tornado.	DOE 0420.1B DOE-HNBK-1169 (9.2)
Confinement ventilation systems should withstand design wind effects on system performance.	The internal HB-Line confinement ventilation system is not credited to withstand wind effects on system performance for this Evaluation Criteria. The HBL confinement walls and ducts will withstand DBWs and thus the credited supply fan interlock will not be affected. The SC HB-Line tornado dampers will close and the Vacuum Interlock will trip the supply fans if the building (Fifth and Sixth Levels) should become pressurized. All exhaust air from HB-Line is passed through the SC credited H-Canyon exhaust tunnel, Sand Filters, and 195-foot stack. For a discussion of the H-Canyon active confinement ventilation system for this Evaluation Criteria, reference Attachment 1. Gap Analysis A discretionary gap has been identified. The Safety Class H-Canyon active confinement ventilation system is shared with HB-Line. For a discussion of the H-Canyon active confinement ventilation system for this Evaluation Criteria, reference Attachment 1.	DOE 0420.1B DOE-HNBK-1169 (9.2)

Attachment 4 - 2004-2 Table 5.1, HB-Line Ventilation System Performance Criteria

Evaluation Criteria	Discussion	Reference
	6- Range Fires/Dust Storms	
Administrative controls should be established to protect confinement ventilation systems from barrier threatening events.	The 221-H Canyon, HB-Line, and the Canyon Exhaust System are exposed hardened structures, the 294-H and 294-1H Sand Filters, the 291-H Stack and Stack Liner, the 292-H Fan House, the 254-19H backup power diesel generator building and ventilation inlet screens of small mesh size provide protection from flaming brands and the wildland fire heat wave. Programmatic controls that will mitigate an external fire are the Emergency Preparedness and Emergency Response Programs for the facility worker, co-located worker and public receptors. Specific preventive actions include the SRS Forest Service Management Program, which consists of controlled burns and mechanical thinning of the underbrush to limit or prevent a wildland fire spreading out of control. The SRS Forestry Department is responsible for fire fighting efforts in regards to wildland fires. The SRS Fire Department will direct extinguishing efforts. The Configuration Control Program ensures functions credited for protection are preserved if design changes are made. Gap Analysis None. The administrative controls are sufficient to protect confinement ventilation systems from barrier threatening events.	DOE O420.1B
	7 - Testability	
Design supports the periodic inspection & testing of filters and housing, and tests & inspections are conducted periodically.	The HB-Line ventilation filters are not credited for this Evaluation Criteria. HEPA filters are procured per specification M-SPP-G-00243 which requires filter testing at the filter test facility in Baltimore, Maryland, regardless of the functional class and regardless of whether credit is taken for the filters. All HEPA filters are functional class GS and no credit is taken for them in the SAR. Periodic filter testing is performed annually on the bank HEPA filters via a Preventative Maintenance program. HBL also has PMs to replace HEPA filters whenever dp approaches 3.0" WC in the banks or 2.0" WC in the gloveboxes. HEPA filter dp, as well as bank and glovebox vacuum, are monitored each shift in facility E-rounds. Results of these E-rounds feed and trigger actions to replace filters and/or swap filter banks. All exhaust air from HB-Line is passed through the SC credited H-Canyon exhaust tunnel, Sand Filters, and 195-foot stack. For a discussion of the H-Canyon active confinement ventilation system for this Evaluation Criteria, reference Attachment 1. Gap Analysis None. The Safety Class H-Canyon active confinement ventilation system is shared with HB-Line.	DOE-HNBK-1169 (2.3.8) ASME AG-1 ASME N510
Instrumentation required to support system operability is calibrated.	The interlock that shuts down the Levels 5/6 supply fans if the building pressurizes is calibrated per TSR requirements. Installed instrumentation is tracked and trended. The Measuring and Test Equipment (M&TE) program is programmatically controlled. Controls include traceability of TSR-related instruments, calibration frequencies, and evaluation of TSR-related items found outside of calibration tolerances. Other HB-Line ventilation system instrumentation is not credited for this Evaluation Criteria. All exhaust air from HB-Line is passed through the SC credited H-Canyon exhaust tunnel, Sand Filters, and 195-foot stack. For a discussion of the H-Canyon active confinement ventilation system for this Evaluation Criteria, reference Attachment 1. Gap Analysis None. The Safety Class H-Canyon active confinement ventilation system is shared with HB-Line.	DOE-HNBK-1169 (2.3.8)

Attachment 4 - 2004-2 Table 5.1, HB-Line Ventilation System Performance Criteria

Evaluation Criteria	Discussion	Reference
Integrated system performance testing is specified and performed.	The interlock that shuts down the Levels 5/6 supply fans if the building pressurizes is performance tested per TSR requirements. Other HB-Line ventilation system integrated performance testing is not credited for this Evaluation Criteria. All exhaust air from HB-Line is passed through the SC credited H-Canyon exhaust tunnel, Sand Filters, and 195-foot stack. For a discussion of the H-Canyon active confinement ventilation system for this Evaluation Criteria, reference Attachment 1. Gap Analysis None. The Safety Class H-Canyon active confinement ventilation system is shared with HB-Line.	DOE-HNBK-1169 (2.3.8)
8 – Maintenance		
Filter service life program should be established.	The HB-Line filter service live program is not credited for this Evaluation Criteria. All exhaust air from HB-Line is passed through the SC credited H-Canyon exhaust tunnel, Sand Filters, and 195-foot stack. The H-Canyon sand filters are the only filters credited in HB-Line accident analyses. Per Engineering Standard 15888, the total HEPA filter life is the sum of shelf life plus service life and shall not exceed 10 years. Shelf life shall not exceed 3 years unless specified otherwise by the filter manufacturer. For a discussion of the H-Canyon Ventilation System for this Evaluation Criteria, reference Attachment 1. Gap Analysis None. The Safety Class H-Canyon active confinement ventilation system is shared with HB-Line.	DOE-HNBK-1169 (3.1 & App C)
9 - Single Failure		
Failure of one component (equipment or control) shall not affect continuous operation.	The interlock that shuts down Levels 5/6 supply fans if Levels 5/6 pressurizes fails safely. If this system is not operable, an LCO is entered and actions are taken per the LCO. Other HB-Line ventilation system components are not credited for this Evaluation Criteria. All exhaust air from HB-Line is passed through the SC credited H-Canyon exhaust tunnel, Sand Filters, and 195-foot stack. For a discussion of the H-Canyon active confinement ventilation system for this Evaluation Criteria, reference Attachment 1. Gap Analysis None. The Safety Class H-Canyon active confinement ventilation system is shared with HB-Line.	DOE O 420.1B, Facility Safety, Chapter I, Sec. 2.b(8)
Automatic backup electrical power shall be provided to all critical instruments & equipment required to operate and monitor the confinement ventilation system.	Automatic backup electrical power for HB-Line is not credited for this Evaluation Criteria, but the control room instruments that monitor the building pressure indications are connected to backup power. The interlock that shuts off the supply fans fails safe on loss of electrical power. All exhaust air from HB-Line is passed through the SC credited H-Canyon exhaust tunnel, Sand Filters, and 195-foot stack. For a discussion of the H-Canyon active confinement ventilation system for this Evaluation Criteria, reference Attachment 1. Gap Analysis None. The Safety Class H-Canyon active confinement ventilation system is shared with HB-Line.	DOE-HNBK-1169 (2.2.7)
10 - Other Credited Functional Requirements		

Attachment 4 - 2004-2 Table 5.1, HB-Line Ventilation System Performance Criteria

Evaluation Criteria	Discussion	Reference
Address any specific functional requirements for the confinement ventilation system (beyond the scope of those above) credited in the DSA.	None	10 CFR 830, Subpart B

Attachment 5

Facility Evaluation Team Composition and Biographical Sketches

R.A. Frushour – WSRC FET H-Canyon Lead Engineer

Dick Frushour has a Bachelor of Science Degree in Mechanical Engineering. He has 32 years experience at SRS in process engineering, project engineering, facility maintenance, and safety basis maintenance. He has been assigned to H-Canyon Engineering since 1997 and has worked closely with the H-Canyon safety basis since 2002. He provides engineering support for writing, revising, and implementing the H-Canyon Safety Basis.

D. W. Murdoch – WSRC HB-Line Phase 1/3 Engineering Mgr.

Dave Murdoch has a Bachelor of Science Degree in Chemical Engineering. He has 23 years experience at SRS in process engineering, operations, and safety basis maintenance. He has been assigned to HB-Line Engineering since 2000 and has worked closely with the HB-Line safety basis since that time. He provides engineering support for the HB-Line Phase 1 and 3 process areas and technical support for writing, revising, and implementing the HB-Line Safety Basis.

K. D. Scaggs – WSRC FET H-Canyon Ventilation Systems Engineer

Kyle Scaggs has a Bachelor of Science Degree in Mechanical Engineering from Clemson University in 1986. He has 12 years experience at SRS in systems engineering and as a construction liaison engineer and facility HVAC Coordinator. He has been assigned to H-Canyon Engineering as a ventilation systems engineer since 1998 and has served as a part of several ventilation system upgrade project teams.

B. Ronald (Ron) Moncrief - WSRC, M&O Engineering, Senior Technical Advisor

Ron Moncrief has a Bachelor of Mechanical Engineering from the Georgia Institute of Technology and has over 40 years of engineering experience at SRS. His experience includes mechanical design, project management, and all aspects of H&V engineering. He currently is an SRS subject matter expert for H&V. He serves as Vice Chairman of the SRS Ventilation and Filtration Standards Committee and contributed to SRS Standard 15889, Confinement Ventilation Systems Design Criteria. He currently is Secretary and voting member of the Nuclear Subcommittee of the Industrial Air Conditioning Technical Committee TC 9.2 in the American Society of Heating, Refrigeration and Air Conditioning Engineers (ASHRAE) and contributed to the ASHRAE publication, HVAC Design Guide for DOE Nuclear Facilities. He also serves as Secretary of the Instruments and Measurements Technical Committee TC 1.2 in ASHRAE.

J.A. Mundo - WSRC FET HB-Line System Engineer

Jose Mundo has Master of Science Degree in Aeronautical and Astronautical Engineering from New York University and is a licensed Mechanical P.E. He has 20 years experience in the aircraft industry, naval nuclear program, and the commercial nuclear industry, and 14 years at SRS. During the past 6 years, Jose has been the HBL Ventilation System Design Authority Engineer responsible for technical reviews, configuration control, USQs, and protection of the facility safety basis.

D. E. Welliver – WSMS H-Area Disposition Regulatory Programs

Dave Welliver has a Bachelor of Science Degree in Chemical Engineering. He has 15 years experience working at various DOE facilities (principally SRS) with safety basis development, implementation and maintenance. He has been assigned to H-Area Disposition (H-Canyon and HB-Line) Regulatory Programs since 2006, managing the development and maintenance of H-Canyon and HB-Line safety bases.

D. F. Hallman – WSMS DSA Subject Matter Expert

Don Hallman has a Bachelor of Science Degree in Chemical Engineering and a Doctor of Philosophy Degree in Nuclear Engineering. He is a Licensed Professional Engineer in South Carolina and a Certified Health Physicist. He has three years experience operating a gamma irradiator, 19 years experience in commercial nuclear power with a vendor and utility, and 17 years in various assignments associated with the Savannah River Site. He has provided regulatory analysis support for HB-Line for the past eight years.

List of Figures

Figure 1, H-Canyon Facilities 47
Figure 2, H-Canyon Ventilation System 48
Figure 3, HB-Line Facilities 49
Figure 4, HB-Line Ventilation System 50

FIGURE 1

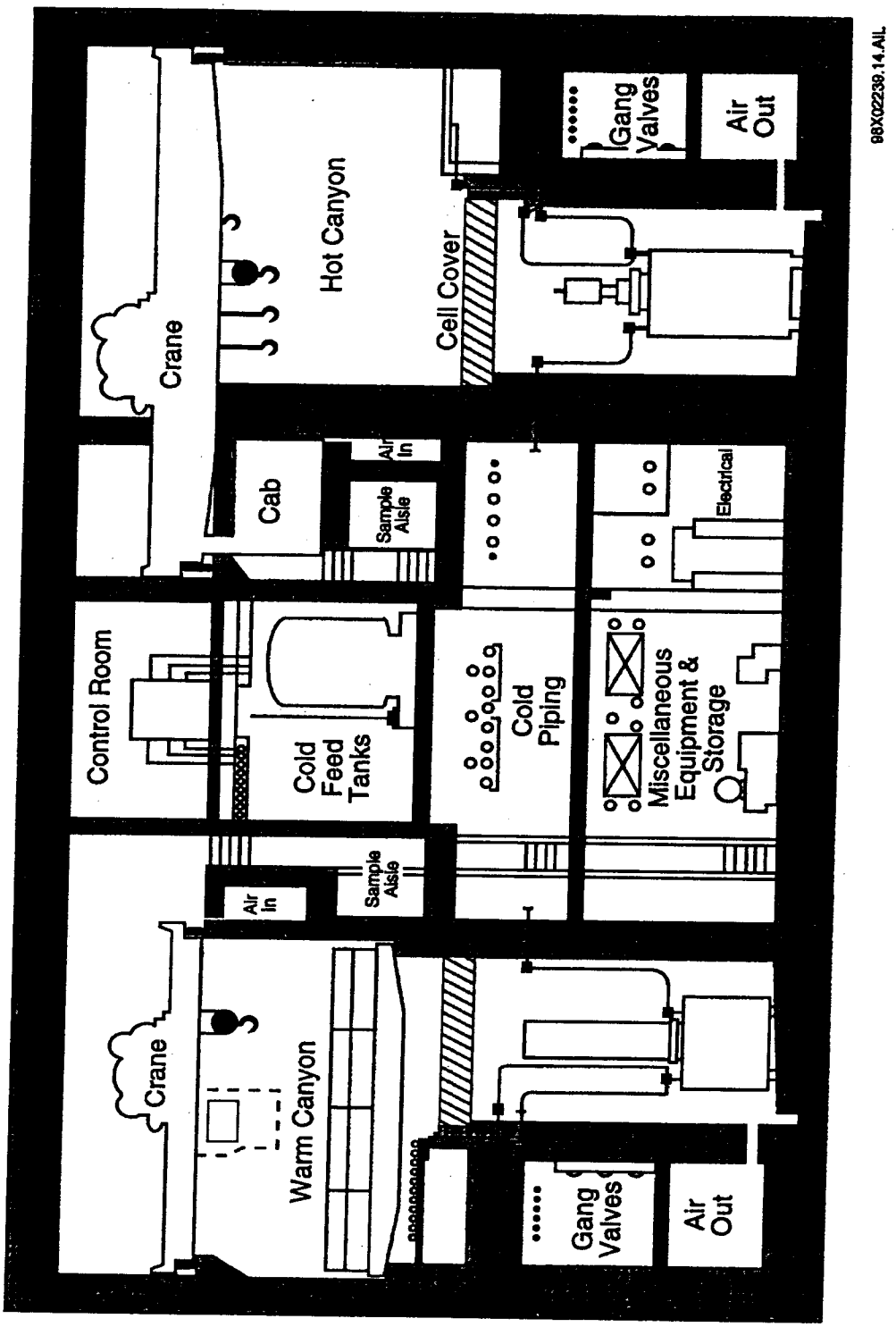

Figure 1

Typical Cross Section View of H-Canyon

FIGURE 2

H-CANYON VENTILATION SYSTEM

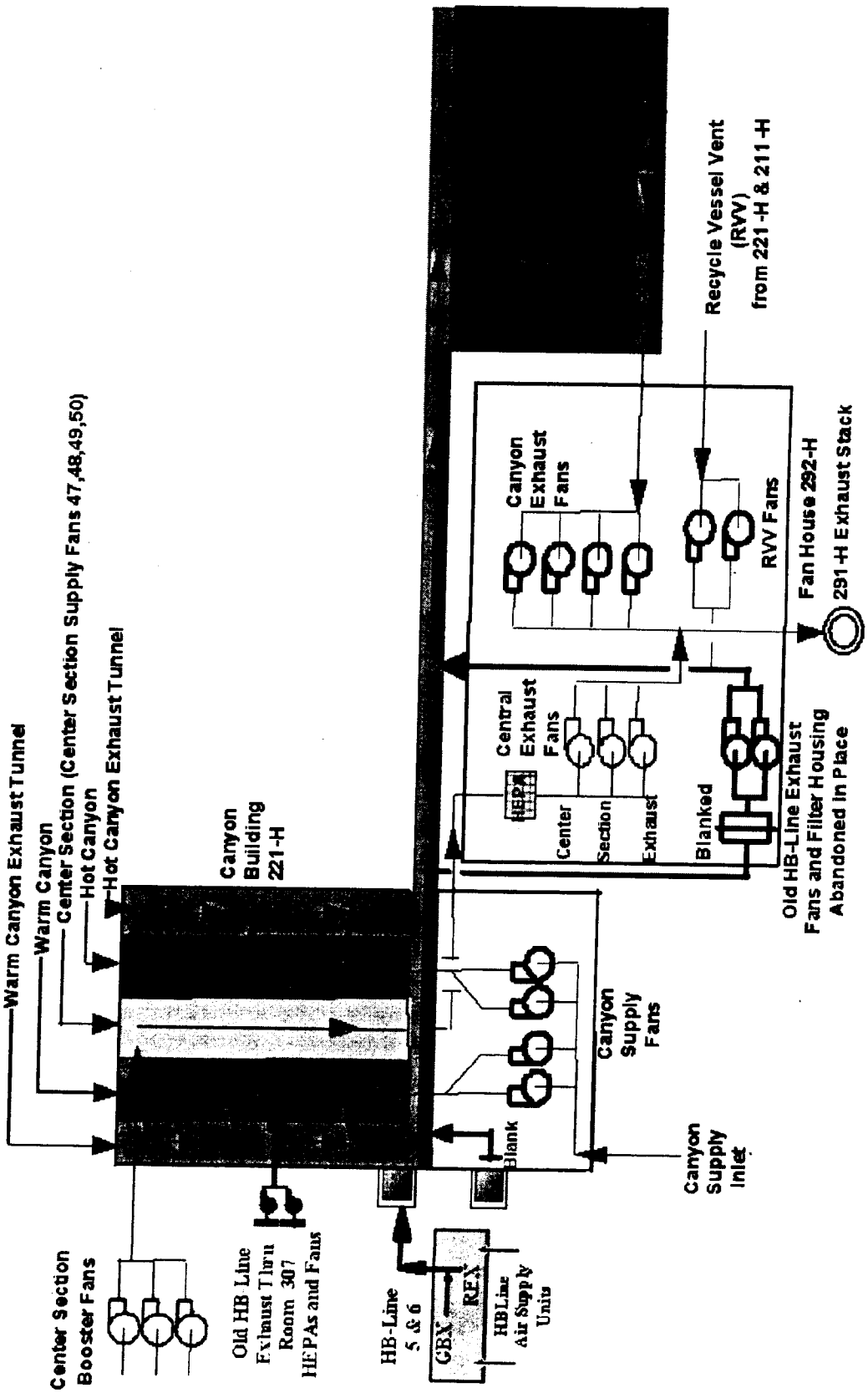

FIGURE 3

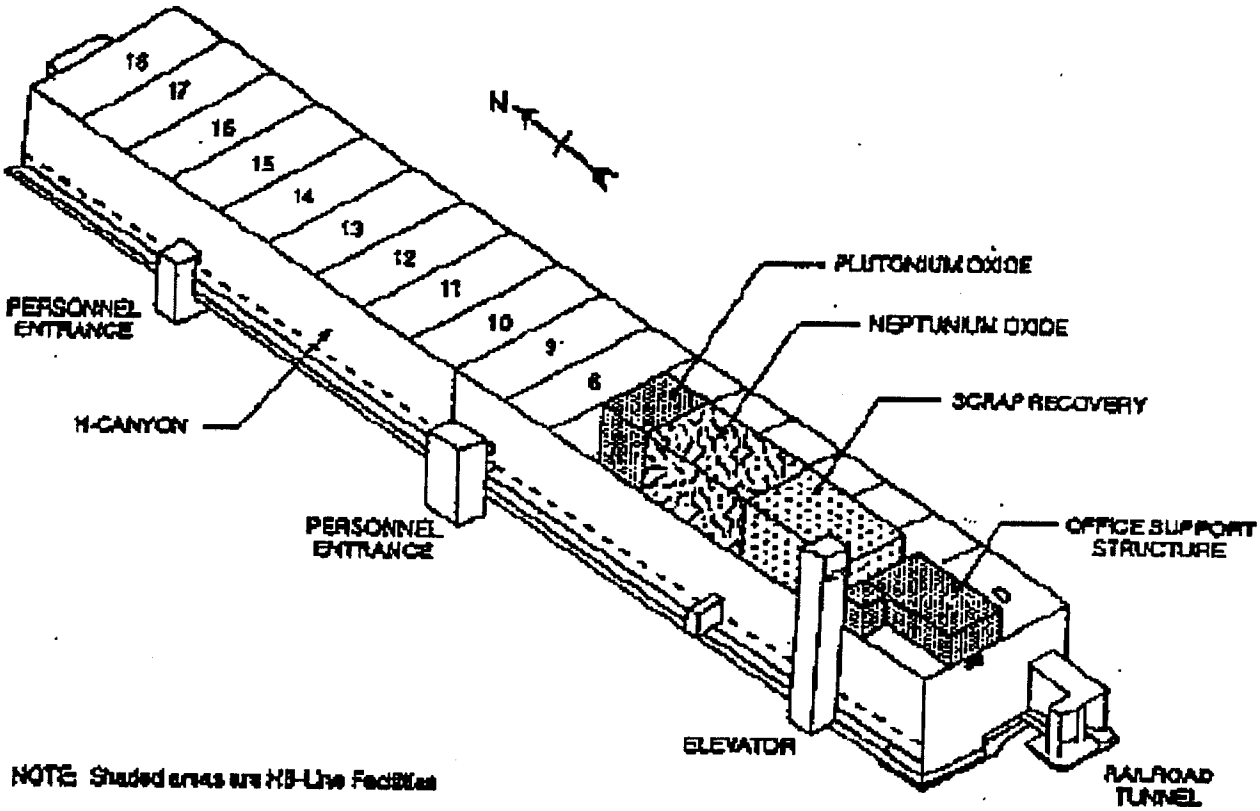

Figure 3

Isometric View of Building 221-H

FIGURE 4

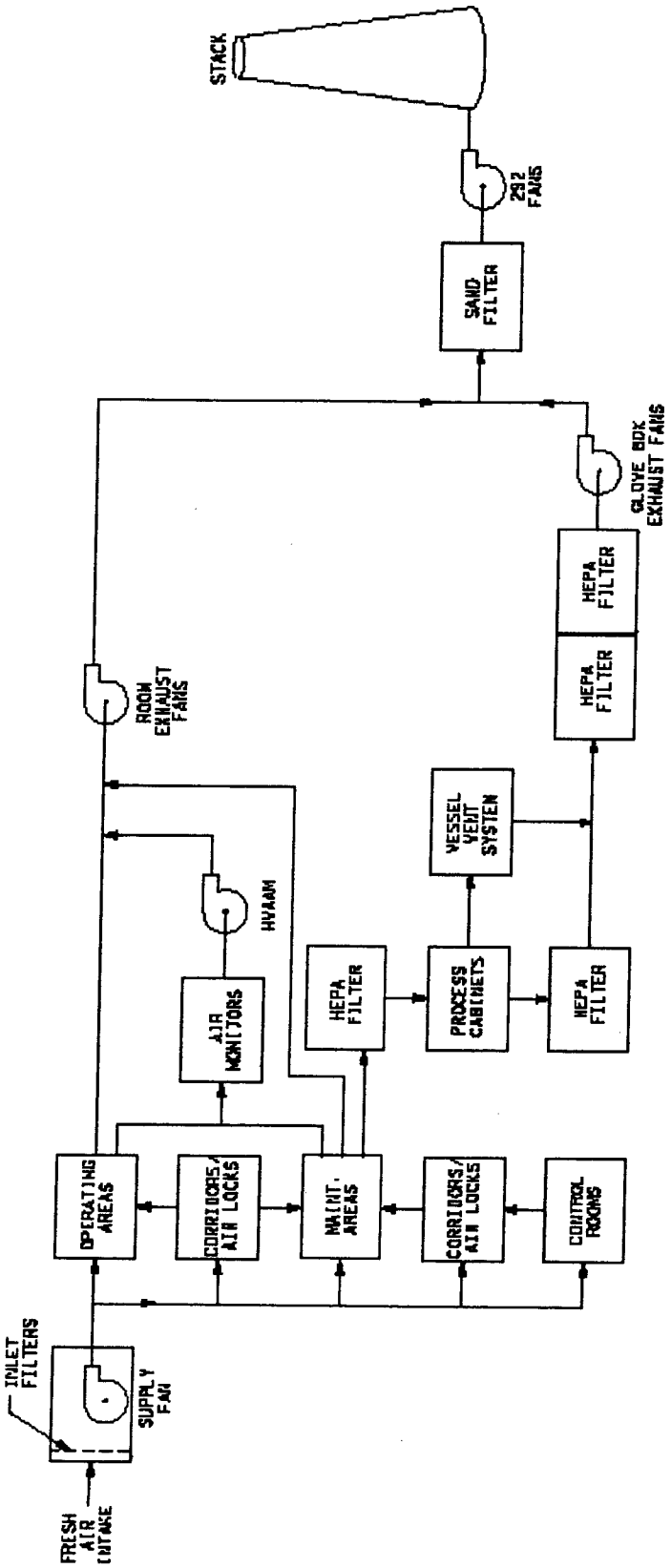

Figure 4

HB-Line Ventilation System