DOE F 1325.8

United States Government

memorandum

Department of Energy (DOE)
Savannah River Operations Office (SR)

DATE: AUG 3 1 2007

REPLY TO ATTN OF: TSD (Mark A. Smith, 803-952-9613)

SUBJECT: Request for Concurrence with Recommendation of the Defense Nuclear Facilities Safety Board 2004-2 Final Report for the Savannah River Site (SRS) Defense Waste Processing Facility (DWPF) Low Point Pump Pit Facility (LPPP)

TO: Dae Y. Chung, Deputy Assistant Secretary for Safety Management and Operations (EM-60), HQ

In accordance with the DNFSB 2004-2 Implementation Plan (IP) Deliverable 8.6.5, please find attached to this memorandum the DNFSB 2004-2 Final Report for the SRS DWPF LPPP Facility. SRS recommends that no modifications or upgrades be made to the DWPF LPPP Exhaust Systems. In accordance with IP Deliverable 8.6.5, please provide Program Secretarial Officer concurrence with this recommendation within 90 days of receipt of this report.

If you have any questions, please contact Mark A. Smith at 803-952-9613.

for Jeffrey M. Allison
Manager

TSD:MAS:dmy

OSQA-07-0123

Attachment:
2004-2 Final Report for DWPF LPPP

cc w/o attachment:
Dr. Robert C. Nelson (EM-61), HQ
Percy Fountain (EM-3.2), HQ

SRS SITE EVALUATION TEAM CONCURRENCE
Final DNFSB 2004-2 Evaluation Report

Facility: **DWPF Low Point Pump Pit.** WSRC Letter LWO-WSE-2007-00130, "Savannah River Site Defense Waste Processing Facility Low Point Pump Pit, 511-S, DNFSB Recommendation 2004-2, Ventilation System Evaluation"

Reference:

1. Commitment 8.6.3 of DNFSB 2004-2 Implementation Plan Revision 1, dated July 12, 2006

2. Ventilation System Evaluation Guidance for Safety-Related and Non-Safety-Related Systems, dated July 2006, Revision 1.

In accordance with the references above, the SRS Site Evaluation Team has reviewed and concurs with the submittal of the attached Savannah River Site Defense Waste Processing Facility Low Point Pump Pit, 511-S Facility.

Site Evaluation Team (SET) Concurrence:

Signature on file _____ 08/27/07
Mark A. Smith, DOE-SR, Site Lead for SET Date

Signature on file _____ 08/27/07
Ken W. Stephens, WSRC Lead for SET Date

SRS Site Evaluation Team consists of the following personnel:

DOE Site Lead and SET Chairman (Mark A. Smith, OSQA/TSD)
DOE Alternate Site Lead & Safety Basis SME (Don J. Blake, AMWDP/WDED)
DOE Ventilation System and Natural Phenomena Hazards SME (Brent J. Gutierrez, AMWDP/WDED)
WSRC 2004-2 Site Lead Ken W. Stephens (TQS/Nuclear Safety, Transportation, and Engineering Standards Dept. Mgr.)
WSRC Alternate Site Lead & Safety Basis SME (Andrew M. Vincent, M&O Chief Engineer Dept.)
WSRC Ventilation System SME (Scott J. MacMurray, SRNL Facility Engineering)
WSMS Safety Basis SME (Jerry L. Hansen)
WSRC SET Assistant Project Manager (Barbara A. Pollard, Nuclear Safety Dept.)

DOE-SR Mail Control
Cover Sheet
*** Incoming Mail ***

US DOE Savannah River Operations Office Mail Control Form SR-59

Thursday, August 9, 2007

Document Number:	071171	Correspondence Type:	Letter
Critical Designation:	Routine	Copy Type:	Original
Addressee:	OSQA 522G000000	Originator:	S. David Burke
Subject:	Savannah River Site Defense Waste Processing Facility Low Point Pump Pit, 511-S, DNFSB Recommendation 2004-2 Ventilation System Evaluation (LWO-SWE-2007-00130)	Originating Org.:	WSRC
		Date Received:	08/09/2007
		Document Date:	07/24/2007
		Classification:	Unclassified
		Assigned To:	TSD 522G100000
		Compliance Date:	
Manager Signature Required:	No	Suspense Date:	
Remarks:		Distribution:	TSD OSQA WDED AMWDP

If This Document is Incorrectly Assigned PLEASE Return Immediately to DOE Mail Control or Forward to the Correct Office and Notify DOE Mail Control

SAVANNAH RIVER SITE
Aiken, SC 29808 • www.srs.gov

RECEIVED
2007 AUG -9 AM 7:56
MAIL CONTROL

July 24, 2007

LWO-WSE-2007-00130

071171

Carl A. Everatt, Director
Office of Safety and Quality Assurance
P.O. Box A
Aiken, SC 29808

Dear Mr. Everatt:

Subject: Savannah River Site Defense Waste Processing Facility Low Point Pump Pit, 511-S, DNFSB Recommendation 2004-2 Ventilation System Evaluation

This letter transmits the final report of DNFSB Recommendation 2004-2, Active Confinement Systems for the Defense Waste Processing Facility (DWPF) Low Point Pump Pit Building (LPPP),511-S, at the Savannah River Site (SRS). This is in accordance with the DOE guidance provided in "Ventilation System Evaluation Guidance for Safety-Related and Non-Safety Related Systems", Revision 0, January 2006, and "2004-2 Ventilation System Evaluation Guidance Addendum," March 6, 2007.

The LPPP is a Hazard Category 2 facility. The LPPP Process Vessel System and the Building Maintenance and Service Area Ventilation System are both classified as Production Support (PS) due to the low consequences to both onsite and off-site receptors from postulated events and the use of other safety related components to prevent or mitigate an event. They are not credited nor required to perform an active confinement function during DBAs. The PVV system is provided at the LPPP to limit the release of radioactive materials, to control the atmosphere within the process tanks, and to limit radioactive particulate escape in the event of overpressurization. Ventilation of the Low Point Pump Pit Building Maintenance and Service Area is provided to filter radioactive contamination (if present) from the air before discharge to the environment, assist with cell ventilation when cell covers are removed, and maintains the Maintenance and Service Area at a slight negative pressure with respect to atmosphere pressure.

In accordance with DOE 2004-2 evaluation guidance, SRS evaluated the ventilations systems for the LPPP Building using the Safety Significant (SS) criteria identified in Table 5.1 due to the LPPP being a Hazard Category 2 facility. To assess functionally for applicable NPH events, PC-2 criteria were used if the system was required for the event by the safety analysis. This was per the guidance given in "2004-2 Ventilation System Evaluation Guidance Addendum."

The lack of a continuous online monitoring system for the effluent air from the LPPP is considered a discretionary gap in regards to Tech 34. WSRC-IM-2002-000014, SRS Air Emissions Monitoring Graded Approach, identified the LPPP as a potential impact category IV source (potential effective dose equivalence of ≤ 0.00001 mrem/year). Monitoring requirements were changed from continuous to an annual grab sample. Due to the cost associated with maintaining the system, and the need to replace obsolete equipment, and the change in regulatory drivers, the continuous air monitoring system was removed by J-DCP-S-03017. The guidance provided in 2004-2 Ventilation System Evaluation Guidance Addendum was used to eliminate NPH gaps where the FSAR did not credit the LPPP Ventilation Systems for providing mitigation. The LPPP Building Maintenance and Service Area Ventilation System does not have a direct measurement of differential pressure between the atmosphere and the Maintenance and Service Area which is a discretionary gap. The parameter that controls the fan is flow, which is felt as adequate as the system is not cascaded and the construction of the Building (sheet metal attached to a superstructure). The LPPP Building Maintenance and Service Area Ventilation System does not have emergency power supplied to its fan. This is a discretionary gap as the system is not SS. No gaps were identified that would affect the ability of the LPPP Ventilation Systems to perform as required during normal, abnormal, or accident conditions. A cost/benefit study was performed for the modification required to provide continuous online monitoring system for the LPPP effluent, providing an indication of differential pressure for the Maintenance and Service Area, and for supplying emergency power to the Maintenance and Service Area fan. These evaluations are summarized in Section 3 of the report.

Based on these evaluations, the Facility Evaluation Team recommends that no modifications/upgrades to the LPPP Exhaust Systems be made. The Site Evaluation Team has reviewed the report and concurs with the Facility Evaluation Team.

Facility Evaluation Team Concurrence:

Jean Ridley — 7/24/07
Jean Ridley
DOE Waste Disposition Engineering
Date

Michael Potvin — 7/24/07
Michael Potvin, FET Lead
Waste Solidification Engineering
Date

Sincerely,

S. David Burke — 7/30/07
S. David Burke
Waste Solidification Engineering Chief Engineer
Date

CC:

K. Stephens, 730-2B
I. Lewis, 766-H
W. Van-Pelt, 766-H
M. Smith, 730-B
K. A. Hauer, 766-H
S. Wilkerson, 704-S
L. T. Nguyen, 704-S

Savannah River Site
Defense Waste Processing Facility
Low Point Pump Pit, 511-S

DNFSB Recommendation 2004-2
Ventilation System Evaluation
Revision 0
July 2007

SAVANNAH RIVER SITE
Aiken, SC 29808 • www.srs.gov

PREPARED FOR THE U.S. DEPARTMENT OF ENERGY UNDER CONTRACT NO. DE-AC09SR18500

Review and Approval

Facility Evaluation Team Concurrence:

Jean M. Ridley — 7/24/07
Jean M. Ridley
DOE Waste Disposition Engineering
Date

Michael M Potvin — 7/24/07
Michael M Potvin, FET Lead
Waste Solidification Engineering
Date

S. David Burke — 7/30/07
S. David Burke
Waste Solidification Chief Engineer
Date

TABLE OF CONTENTS

Page

Acronyms 4
Definitions 6
Executive Summary 7
1. Introduction 9
   1.1 Vitrification Process Overview 9
   1.2 LPPP Ventilation Systems 12
   1.3 Major Modifications 12
2. Functional Classification Assessment 12
   2.1 Existing Classification 12
   2.2 Evaluation 13
   2.3 Summary 13
3. System Evaluation 13
   3.1 Identification of Gaps 14
   3.2 Gap Evaluations 14
   3.3 Modifications and Upgrades 15
4. Conclusion 16
References 17
Attachment 1 – LPPP Building Ventilation Systems Description 18
Attachment 2 – 2004-2 Table 4.3 Zone 1 LPPP Ventilation Systems 28
Attachment 3 – 2004-2 Table 5.1 LPPP PVV System 36
Attachment 4 – 2004-2 Table 5.1 LPPP Building (Maintenance and Service Area) Ventilation System 50
Attachment 5 – DWPF LPPP Building Ventilation Systems Facility Evaluation Team 65

Acronyms

ARP	Actinide Removal Process
CW	Co-located Worker (100 meters)
DBA	Design Basis Accidents
DBE	Design Basis Earthquake
DCS	Distributed Control System
DF	Decontamination Factor
DNFSB	Defense Nuclear Facilities Safety Board
DOE	Department of Energy
DSA	Documented Safety Analysis
DSS	Decontaminated Salt Solution
DWPF	Defense Waste Processing Facility
EOP	Emergency Operating Procedure
ETP	Effluent Treatment Project
FOS	Field Operation Station
FSAR	Final Safety Analysis Report
GWSB	Glass Waste Storage Building
HEPA	High Efficiency Particulate Air
LPPP	Low Point Pump Pit
LCO	Limiting Condition of Operation
MAR	Material at Risk
MCC	Motor Control Center
MCU	Modular Caustic-Side Extraction Unit
MOI	Maximally Exposed Offsite Individual
MRS	Manipulator Repair Shop
MST	Monosodium Titanate
NP	Natural Phenomena
NPH	Natural Phenomena Hazard
OGCT	Offgas Condensate Tank
PC	Performance Category
PHA	Preliminary Hazard Analysis
PHR	Process Hazard Review
PPT	Precipitate Pump Tank
PRFT	Precipitate Reactor Feed Tank

PS	Production Support
RBA	Radiological Buffer Area
RCT	Recycle Collection Tank
REDC	Remote Equipment Decontamination Cell
REM	Roentgen Equivalent Man
RPC	Remote Process Cell
RPCP	Remote Process Cell Plenum
RPT	Recycle Pump Tank
RS	Regulated Shop
RWT	Recycle Waste Tank
SC	Safety Class
SE	Strip Effluent
SEFT	Strip Effluent Feed Tank
SPC	Salt Process Cell
SPT	Sludge Pump Tank
SRAT	Slude Receipt and Adjustment Tank
SRS	Savannah River Site
SS	Safety Significant
TOC	Total Organic Carbon
TSR	Technical Safety Requirements

Definitions

Active Confinement Ventilation System	A ventilation system that uses mechanical means (e.g., blower) to circulate air within, and remove air from a building or building space through filtration. (DOE-HDBK-1169-2003, DOE Nuclear Air Cleaning Handbook)
Confinement	A building, building space, room, cell, glovebox, or other enclosed volume in which air supply and exhaust are controlled, and typically filtered. (DOE-HDBK-1169-2003, DOE Nuclear Air Cleaning Handbook)
Confinement System	The barrier and its associated systems (including ventilation) between areas containing hazardous materials and the environment or other areas in the facility that are normally expected to have levels of hazardous material lower than allowable concentration limits. (DOE-HDBK-1169-2003, DOE Nuclear Air Cleaning Handbook)
Hazard Category	Hazard Category is based on hazard effects of unmitigated release consequences to offsite, onsite and local workers. (DOE-STD-1027-92, Hazard Categorization and Accident Analysis Techniques for Compliance with DOE Order 5480.23, Nuclear Safety Analysis Reports)
Performance Category	A classification based on a graded approach used to establish the NPH design and evaluation requirements for structures, systems and components. (DOE-STD-1021-93, Natural Phenomena Hazards Performance Categorization Guidelines for Structures, Systems and Components)
Ventilation System	The ventilation system includes the structures, systems, and components required to supply air to, circulate air within, and remove air from a building/facility space by natural or mechanical means. (DOE-HDBK-1169-2003, DOE Nuclear Air Cleaning Handbook)

Executive Summary

This confinement ventilation evaluation is for the Defense Waste Processing Facility (DWPF) Low Point Pump Pit (LPPP), 511-S, at the Savannah River Site (SRS). This evaluation was developed in accordance with the Department of Energy (DOE) evaluation guidance for Defense Nuclear Facility Safety Board (DNFSB) Recommendation 2004-2, "Ventilation System Evaluation Guidance for Safety-Related and Non-Safety-Related Systems," Revision 0, January 2006 and "2004-2 Ventilation System Evaluation Guidance Addendum," March 6, 2007. The ventilations systems for the LPPP, 511-S were identified as a part of the SRS Waste Solidification 2004-2 evaluation scope. This evaluation included the LPPP Process Vessel Vent System and the LPPP Building Maintenance and Service Area active ventilation systems.

Underground interarea pipelines are used to transfer High Level Waste slurries between H-Area and DWPF. Similarly, a separate underground line is used to transfer aqueous radioactive waste generated in DWPF to the H-Area Tank Farm via the LPPP Recycle Waste Tank (RWT).

Feed material to the Vitrification Building 221-S currently includes sludge slurry from H-Area. Future feed material will include monosodium titanate (MST)/Sludge Solids produced by the Actinide Removal Process (ARP) in 512-S and Strip Effluent (SE) produced by the Cs-137 stripping process in Modular Caustic-Side Extraction Unit (MCU). Each slurry feed is or will be transferred to Building 221-S via the LPPP. Sludge is transferred directly from H-Area to the LPPP Sludge Pump Tank (SPT) for subsequent transfer to the Sludge Receipt Adjustment Tank (SRAT) located in the Chemical Processing Cell (CPC) of Building 221-S. MST/Sludge Solids will be transferred to the LPPP Precipitate Pump Tank (PPT) for subsequent transfer to the Precipitate Reactor Feed Tank (PRFT) located in the Salt Process Cell (SPC). SE will be transferred via a jumper in the LPPP Sludge Pump Tank (SPT) Cell to the Strip Effluent Feed Tank (SEFT) in the CPC.

The design of the LPPP Building incorporates multiple confinement levels to minimize releases of radioactivity to the environment and to minimize transport of radioactive contaminants within the facility. The primary confinement for the radioactive material at LPPP consists of the process vessels and piping, process cells and cell covers, and process vessel vent system.

The PVV system is provided at the LPPP to limit the release of radioactive materials, to control the atmosphere within the process tanks, and to limit radioactive particulate escape in the event of overpressurization. Ventilation of the Low Point Pump Pit Building Maintenance and Service Area is provided to filter radioactive contamination (if present) from the air before discharge to the environment, provides assists with cell ventilation when cell covers are removed, and maintains the Maintenance and Service Area at a slight negative pressure with respect to atmosphere pressure. See Attachment 1 for further details.

The LPPP Facility is a Hazard Category 2 facility.

The hazard analysis for the LPPP facility did not identify accidents that could lead to consequences challenging the offsite Evaluation Guidelines (EGs) according to SRS procedure E7, 2.25 Functional Classification, Revision 3; however, accidents that could challenge the onsite EG were identified. These accidents include explosions in the process vessels, spill and leaks, seismic and tornado/high winds. The bounding event, seismic impact on the LPPP Building, yielded an unmitigated dose of 0.86 rem for the offsite receptor and 400.6 rem for the collocated workers (50% meteorology and Leak Path Factor of 1.0 was used). The seismic related explosion events are prevented with PC-2 seismically qualified Safety Significant nitrogen purge of the SPT and PPT. The LPPP superstructure, crane, vaults, cell covers, jumpers, above the purge jumpers, and SPT and PPT are also PC-2 seismically qualified. The RWT and SE jumper

in the SPT cell are not credited to survive a PC-2 seismic event and are therefore assumed to fail, resulting in a spill of their contents. This results in a mitigated onsite dose of 10.05 rem, with the majority of the dose due to the spill of the RWT contents (10 rem). Neither the PVV nor the Building Maintenance and Service Area Ventilation systems are credited for any Design Basis Accidents. A spill of 15,000 gallons of sludge during an Inter-Area transfer results in an onsite dose of 17.8 rem. The LPPP cell vaults and cell covers are credited with providing mitigation for these events.

In accordance with the DOE 2004-2 Evaluation Guideline and 2004-2 Ventilation System Evaluation Guidance Addendum, SRS evaluated the Ventilation Systems at 511-S using SS criteria to develop DNFSB 2004-2 Ventilation Performance Criteria, Table 5.1. A discretionary gap was found with both systems in that effluent from the LPPP Stack is not continuously monitored as DNFSB Tech 34 suggest. A discretionary gap also exists in the LPPP Building Maintenance and Service Area Ventilation in that emergency power is not provided to the exhaust fan. There is also a discretionary gap with LPPP Building Maintenance and Service Area Ventilation in that there is no direct DP measurement between the environment and the Maintenance and Service Area. A cost/benefit study was performed for the modification required to install a continuous online monitoring system for the LPPP, providing emergency power to the Maintenance and Service Area Exhaust Fan, and monitoring the differential pressure between the Maintenance and Service Area and the environment. These evaluations are summarized in Section 3 of this report.

The PVV system and the LPPP Building Maintenance and Service Area Ventilation system are functionally classified as Production Support (PS) due to the low mitigated consequences to both onsite and off-site receptors from postulated events without credit for ventilation and the use of other safety related components to prevent or mitigate an event. They are not credited to perform an active confinement function during DBAs since the releases are contained within the cell vault and cell covers and ventilation is secured if a filter breach is indicated by low HEPA pressure.

Based on these evaluations, the Facility Evaluation Team recommends that no modifications/upgrades to the LPPP Exhaust Systems are recommended.

1. Introduction

1.1 Vitrification Process Description

Refer to figure 1 and figure 2.

Feed material to the Vitrification Building 221-S currently includes sludge slurry from H-Area. Future feed material will include monosodium titanate (MST)/Sludge Solids produced by the Actinide Removal Process (ARP) in 512-S and Strip Effluent (SE) produced by the Cs-137 stripping process in Modular Caustic-Side Extraction Unit (MCU). Radioactive sludge is transferred from waste tanks in H-Area to the Low Point Pump Pit (LPPP) sludge tank as required to support DWPF operation. The LPPP sludge tank transfers sludge to the Sludge Receipt and Adjustment Tank (SRAT) in the Chemical Process Cell (CPC). MST/Sludge Solids and/or SE may be added. In ARP, Salt Solutions are treated with MST, to adsorb actinides and Sr-90, and to allow concentration of MST/Sludge Solids by filtration in 512-S. The concentrated MST/Sludge Solids stream is transferred to the Precipitate Reactor Feed Tank (PRFT) in the Vitrification Building via the LPPP-Precipitate Pump Tank (PPT). The Filtrate is transferred to MCU in H-Area where the Cs-137 is stripped producing an SE stream that is sent to the DWPF Strip Effluent Feed Tank (SEFT) via the LPPP-Sludge Pump Tank (SPT) Cell. The resultant MCU Decontaminated Salt Solution (DSS) stream is sent to Tank 50 for disposal at the Saltstone Facility. The MST/Sludge Solids stream from the PRFT and the SE stream from the SEFT are transferred to the SRAT and mixed with the sludge feed. Nitric acid and formic acid are added to the SRAT. Formic acid is used to reduce mercury compounds in the sludge to mercury. Nitric acid is added, as required, to control redox or rheological properties of the slurry. In the SRAT, the elemental mercury is steam distilled to a decanting/wash tank. Mercury is periodically removed from the wash tank and transferred to the mercury recovery and purification facilities in the laboratory area. Frit is added to the sludge mixture after it is transferred from the SRAT to the Slurry Mix Evaporator (SME). The solid-liquid ratio of the sludge-frit slurry is adjusted by evaporation, and the sludge-frit slurry mixture is then transferred to the Melter Feed Tank and fed into the melter at a controlled rate.

The melting process is accomplished in a slurry-fed, joule-heated melter. The melt process incorporates high level radioactive waste into a solid, borosilicate glass matrix. The melter is fed an aqueous slurry of waste and glass-forming material (frit). The molten glass is poured into a stainless steel canister.

Figure 1 Waste Streams

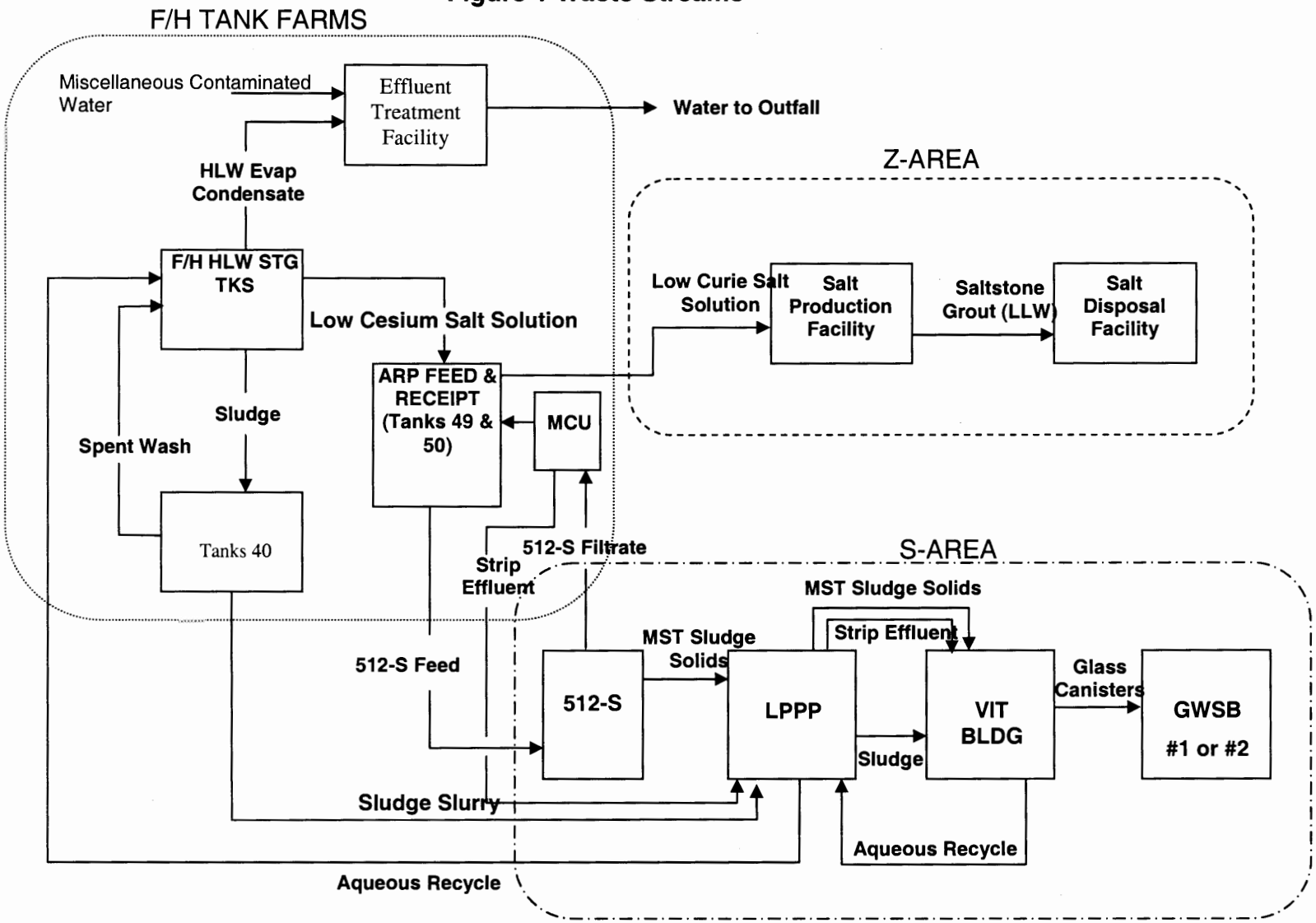

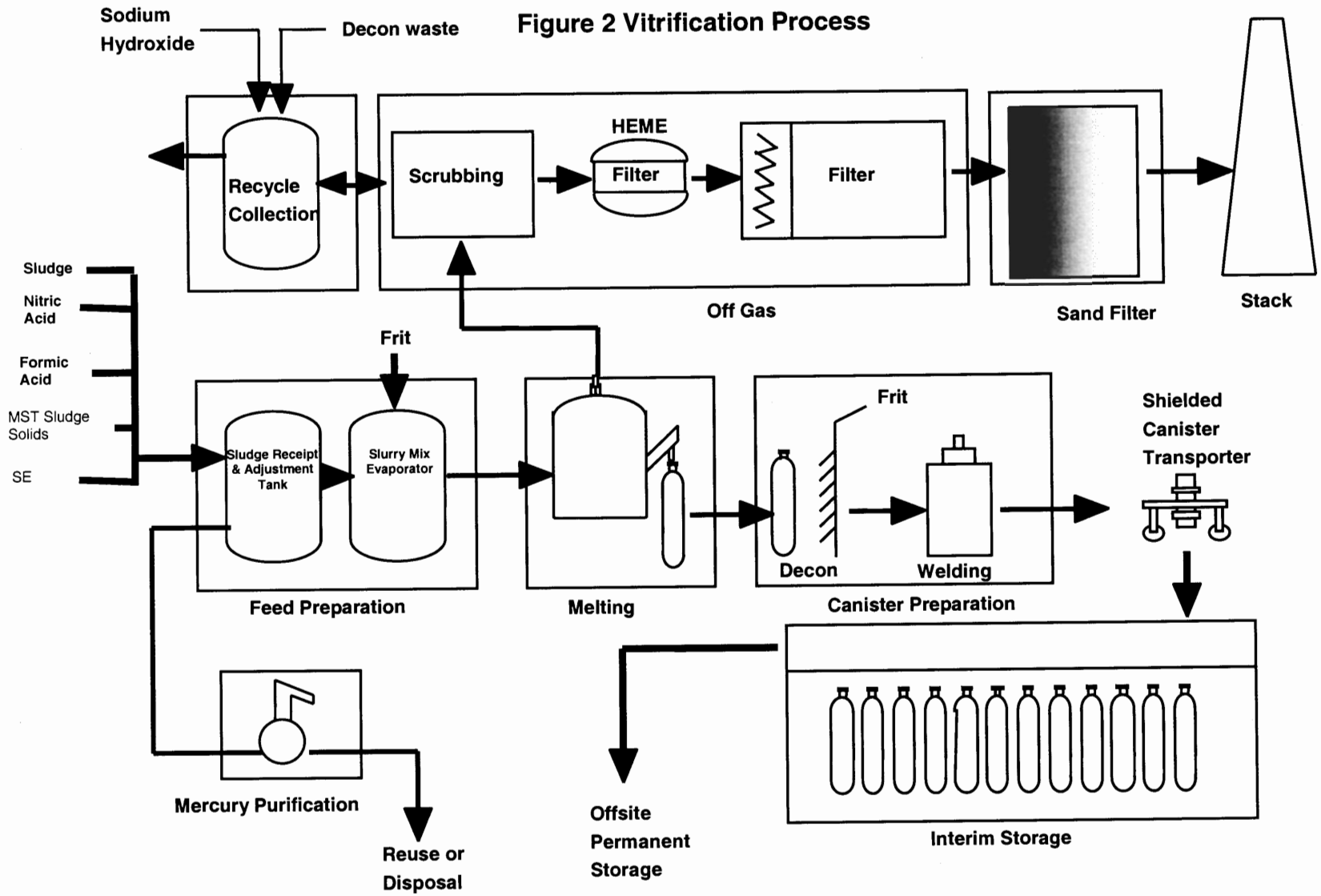

Figure 2 Vitrification Process

1.2 LPPP Building Ventilation Systems

The Low Point Pump Pit (LPPP) is equipped with three pump tanks: the Sludge Pump Tank (SPT), the Precipitate Pump Tank (PPT), and the Recycle Waste Tank (RWT). The pump tanks are housed separately in contiguous concrete cells. The pump cells are below ground with the walls extending upward above the building floor. These cells are separated by shield walls and atmospherically connected through ventilation openings in the side walls of the center (recycle waste) cell. Each cell has seven removable concrete shield covers that form a barrier over the cell to protect and maintain the structural integrity of the cell and its contents.

Underground interarea pipelines are used to transfer High Level Waste slurries between H-Area and DWPF. Similarly, a separate underground line is used to transfer aqueous radioactive waste generated in DWPF to the H-Area Tank Farm via the LPPP Recycle Waste Tank (RWT).

The design of the LPPP Building incorporates multiple confinement levels to minimize releases of radioactivity to the environment and to minimize transport of radioactive contaminants within the facility. The primary confinement for the radioactive material at LPPP consists of the process vessels and piping, process cells and cell covers, and process vessel vent system.

The PVV system is provided at the LPPP to limit the release of radioactive materials, to control the atmosphere within the process tanks, and to limit radioactive particulate escape in the event of overpressurization. Ventilation of the Low Point Pump Pit Building Maintenance and Service Area is provided to filter radioactive contamination (if present) from the air before discharge to the environment, assist with cell ventilation when cell covers are removed, and maintains the Maintenance and Service Area at a slight negative pressure with respect to atmosphere pressure. The Building Maintenance and Service Area Ventilation System assist the PVV System in providing a suction of the cell vaults when cell covers are removed as the required flow capacity exceeds the PVV System rating. This cross tie is to the cell ventilation only and not to the process vessels.

See Attachment 1 for further LPPP Ventilation descriptions and figures.

1.3 Major Modifications

There are no Major Modifications currently underway or planned for the LPPP Building

2. Functional Classification Assessment

2.1 Existing Classification

The LPPP PVV and Building Maintenance and Service Area Ventilation Systems are functionally classified as PS They have the function of mitigating the effects of normal internal radiological process events with a minimum Decontamination Factor (DF) of 200 by maintaining negative pressure in the vault cells and process vessels (PVV) and in the Maintenance and Service Area (Building Ventilation), which causes transport of airborne radionuclides from these areas through the HEPA filters and then out through the LPPP Exhaust Stack.

2.2 Evaluation

The hazard analysis for the LPPP facility did not identify accidents that could lead to consequences challenging the offsite Evaluation Guidelines (EGs) according to SRS procedure E7, 2.25 Functional Classification, Revision 3; however, accidents that could challenge the onsite EG were identified. These accidents include explosions in the process vessels, spill and leaks, seismic and tornado/high winds. The bounding event, seismic impact on the LPPP Building, yielded an unmitigated dose of 0.86 rem for the offsite receptor and 400.6 rem for the collocated workers (50% meteorology, 100 cm surface roughness and Leak Path Factor of 1.0 was used). The seismic related explosion events are prevented with PC-2 seismically qualified Safety Significant nitrogen purge of the SPT and PPT. The LPPP superstructure, crane, vaults, cell covers, jumpers, above the purge jumpers, and SPT and PPT are also PC-2 seismically qualified. The RWT and SE jumper in the SPT cell are not credited to survive a PC-2 seismic event and are therefore assumed to fail, resulting in a spill of their contents. This results in a mitigated onsite dose of 10.05 rem, with the majority of the dose due to the spill of the RWT contents (10 rem). Neither the PVV nor the Building Maintenance and Service Area Ventilation systems are credited for any Design Basis Accidents. A spill of 15,000 gallons of sludge during an Inter-Area transfer results in an onsite dose of 17.8 rem. The LPPP cell vaults and cell covers are credited with providing mitigation for these events.

There are numerous procedural controls and alarm response procedures associated with the PVV System. An indication of a breach HEPA filter requires the dispatching of a survey team to monitor for downwind releases and to implement sampling of the LPPP effluent air. If an atmospheric release is suspected, personnel are to be relocated, the PVVV System secured, and transfers stopped. Low system air flows requires stopping transfers into the LPPP Precipitate tank and verifying that a fan is running, fan inlet valve is open, and the fan control program is running. Both low and high differential pressure alarms are provided for the differential pressure between the PPT and the cell. A high alarm results in the verification of the set point for the blower and a low alarm results in ensuring a blower is running and that the air flow is proper.

Transfer procedures require that all cell covers are installed and that transfers are to be stopped if a 10 gallon sump increase is seen. Tank levels are monitored for both high level and low level conditions that may indicate tank overfilling or a tank rupture.

These procedural controls are discussed as they provide one means of assuring that radioactive material remains in the primary confinement structure. If there are indications to the contrary, then actions are taken to stop the release of material either by stopping the transfer or stopping the ventilation system.

As the transfer procedures requires cell covers to be installed, the LPPP Building Maintenance and Service Area Ventilation Systems will not provide any mitigation during transfer events. There are only two times where it is envisioned that this system would provide any mitigation to process events. One would be if the strip effluent jumper required draining as the cell cover would need to be removed to accomplish this. The dose associated with this is almost entirely due to shine. Prior to draining this line, it is expected that it would be flushed. The only other time that it could provide mitigation would be during jumper removal (residual drainage) or tank rupture. Both the Sludge Pump Tank and Precipitate Pump Tank are PC-2 qualified vessels. Little if any mitigation for process events would be provided by the Building Maintenance and Service Area Ventilation System.

2.3 Summary

The LPPP Ventilation Systems are appropriately classified as PS.

3. System Evaluation

SRS evaluated the LPPP Building confinement ventilation systems in accordance with Defense Nuclear Facility Safety Board (DNFSB) Recommendation 2004-2, "Ventilation System Evaluation Guidance for Safety-Related and Non-Safety-Related Systems," Revision 0, January 2006 and "2004-2 Ventilation System Evaluation Guidance Addendum," March 6, 2007. Tables 4.3 (Attachments 2) were developed from the DWPF FSAR, PHR, and PHA events. Systems were evaluated and documentation was reviewed to confirm system configuration by the associated System Cognizant Engineers. System configurations were evaluated against the SS criteria in Table 5.1 and documented in Attachments 3 and 4. "2004-2 Ventilation System Evaluation Guidance Addendum," March 6, 2007, was used as justification to eliminate gaps that were based on evaluating a PS system against SS criteria in which the FSAR did not credit the PS system.

3.1 Identification of Gaps

This assessment evaluated the LPPP Building Ventilation systems and supporting structures, systems against SS/PC-2 criteria. The methodology and events chosen were previously documented in Table 4.3 and submitted to DOE (Reference 5).

The SS classification and the associated attributes in Table 5.1 were used as a guide so that the active confinement ventilation systems could be evaluated to a common set of criteria. Since the LPPP PVV and LPPP Building Maintenance and Service Area Ventilation Systems are functionally classified as PS, modifications or closure recommendations to close any identified gap would be discretionary in nature.

3.2 Gap Evaluations

Each of the LPPP Ventilation systems was compared with SS system performance criteria in Table 5.1 of Reference 5. In order to perform this evaluation, ventilation and support systems documentation was reviewed to confirm system configuration. Systems were then evaluated against the criteria in Table 5.1 and the Addendum. The following gaps were found:

The lack of a continuous online monitoring system for the effluent air from the LPPP Stack is considered a discretionary gap in regards to Tech 34. WSRC-IM-2002-000014, SRS Air Emissions Monitoring Graded Approach, identified the LPPP as a potential impact category IV source (potential effective dose equivalence of ≤ 0.00001 mrem/year). Monitoring requirements were changed from continuous to an annual grab sample. Due to the cost associated with maintaining the system, and the need to replace obsolete equipment, and the change in regulatory drivers, the continuous air monitoring system was removed by J-DCP-S-03017. It is estimated that the project cost to reinstall a continuous online monitoring system would be $3,460,000 ($2,422,000 to $5,190,000) with an additional cost of $1,200,000 ($840,000 to $1,800,000) for upgrading the system to being PC-2 NPH qualified. This is a Class 5 estimate prepared by Site Estimating. This does not include the cost associated with qualifying the PVV System to function during and after a PC-2 NPH event. The FSAR does not credit PVV System for providing any mitigation for design basis accidents as the cell vaults and shield covers provide

adequate mitigation. Both the LPPP PVV and Building Maintenance and Service Area discharge through a common stack.

The LPPP Building Maintenance and Service Area Ventilation System does not have a direct measurement of differential pressure between the atmosphere and the Maintenance and Service Area. The Service and Maintenance Area is separated from the outside by sheet metal that is attached to the LPPP superstructure. Air is pulled into this area via six wall mounted counterweighted louvers. The louvers start to open at 0.05" inwc and each is rated for 2,020 scfm. There is a low flow alarm for the system. The system is not cascaded and thus flow provides an adequate measure of system performance. The fan is controlled via flow. It is estimated that the cost to install a differential pressure monitor is $60,000 ($60,000 to $90,000). This is an estimate provided by Design Engineering.

The LPPP Building Maintenance and Service Area Ventilation System does not have emergency power supplied to its fan. It is estimated the project cost to connect the fan to an emergency powered motor control center located at the LPPP is $2,000,000 ($1,400,000 to $3,000,000). This is a Class 5 estimate prepared by Site Estimating.

3.3 Modifications and Upgrades

Install Continuous air monitoring system for LPPP stack. (PS design classification)
Scope: (See the attached flow diagrams for the complete system)
Provide HP vacuum system.
(Each HP vacuum system consists of dual 100% capacity vacuum blowers that provide force to draw for the effluent air monitoring system)
Install Isokinetic sample probes (Two).
Provide Two Air sampler includes local flow meter that provides indication of the air sample flow rate, Geiger Mueller tube.
Two CAMs.
Provide Local radiation monitor panel includes transmitter RIT, high radiation switch RSH, RAH, HS, local annunciation and radiation high alarm.
Install Flow signal conditioning panel.
Install flow control panels include, FE, FT, FSL, FIC, FY, FCV, US
Provide DeltaV signals for Radiation indicator low scale, Flow alarm, Radiation indicator high scale, and Radiation alarm high, trouble alarms.
Provide UPS and normal 120vac power to various instruments
Reroute power, control, and DeltaV cables
Route cables, conduit, piping connections to HP vacuum system, instrument tubing
Locate all electrical component, piping, instrumentations and fittings, mechanical equipment like vacuum blowers, silencers, and valves
Revise P&ID and logic diagram, schematic diagram, cable block diagram, raceway/equipment layout, SDD, piping, data sheets, and scaling sheets
Prepare Purchase req, DCP, AIM, PDMS, instrumentation list, CLI
Procurement/construction/startup/P&CS coordination
SCDHEC

Install Continuous air monitoring system for LPPP stack same as above 2a and with PC-2 qualification and with emergency power and safety significant: (SS design classification)
Scope:
Same as above 2a and
SIL calculations
Seismic qualification
Safety significant design implementation

Powering LPPP Maintenance and Service Area Exhaust Fan via emergency bus.
Scope:
Provide Power from MCC B907 cubicle 2E (MCC B907 is D/G powered)
Procure in the MCC cubicle with fused disconnect switch
Install local disconnect switch
Install local starter panel
Reroute power, control, DeltaV cables, and route cables, conduit
Revise diesel load calculation
Locate all electrical components
Revise P&ID and logic diagram, schematic diagram, cable block diagram, raceway layout, SDD
Prepare Purchase req, DCP, AIM, PDMS
Procurement/construction/startup coordination

It is not recommended that the LPPP stack monitoring system be upgraded to a continuous online system due to the low consequences associated with potential releases from the LPPP, the high cost, and the guidance provided by WSRC-IM-2002-000014, SRS Air Emissions Monitoring Graded Approach. There is no direct dose reduction associated with the upgrade as personnel would still be dispatched as needed to fulfill emergency response actions.

It is not recommended that the differential pressure indicator be installed for the Maintenance and Service Area at LPPP. As the system is not cascaded, flow provides an adequate indication the air is traveling from a clean environment to a potentially contaminated one. This air is filter by a HEPA bank prior to discharge to the environment. There is no dose reduction associated with this item.

As discussed earlier, the LPPP Building Maintenance and Service Area Ventilation System does not provide significant mitigation of process events as cell covers are required to be installed during transfers. A loss of power would result in a stagnant air condition in the Maintenance and Service Area. There would not be a driver for airborne contamination to leave the building. When one of the PVV fans restarts following loss of power (supplied via emergency bus), there should be flow from the Maintenance and Service Area into the process cells due to inleakage between the cell covers. It is not recommended that the fan be tied to the emergency bus due to the limited time the fan is cross tied to the PVV (cell not process vessel), the limited opportunities while crossed tie to provide any mitigation, and the cost involved.

4. Conclusion

The ventilation systems for the LPPP Building were evaluated via Table 4.3 to determine their effect on dose reduction to both the offsite and onsite receptors. This confirmed both their functional classification and the benefit that could be realized provided there were no gaps in their functional requirement as given by Table 5.1 and the FSAR. The LPPP PVV and Building Maintenance and Service Area Ventilation Systems, which are appropriately classified as PS, are not required by the FSAR for response to DBAs. The LPPP PVV System will provide its design required filtering of exhaust air from process cells and vessels. The LPPP Building Maintenance and Service Area Ventilation System will provide its design required filtering of air from the Maintenance and Service Area. The gap with the LPPP Exhaust Stack monitoring, annual grab samples versus continuous online monitoring, the gap with lack of differential pressure indicator for the Maintenance and Service Area, and the gap with the lack of emergency power to the LPPP Building Maintenance and Service Area Ventilation fan, are not recommended to be closed at this time.

References

1. WSRC-SA-6, Rev 25, October 2006, "Final Safety Analysis Report Savannah River Site Defense Waste Processing Facility."
2. Preparation Guide for U.S. Department of Energy Nonreactor Nuclear Facility Documented Safety Analyses, Change Notice No. 3, DOE-STD-3009-94, U.S. Department of Energy, Washington, DC, March 2006.
3. Conduct of Engineering and Technical Support, WSRC Procedure Manual E7, Procedure 2.25, Functional Classification, Rev. 3 and Rev 14, Westinghouse Savannah River Company, February 1995 and November 2004.
4. Deliverables 8.5.4 and 8.7 of Implementation Plan for DNFSB Recommendation 2004-2, Ventilation System Evaluation Guidance for Safety-Related and Non-Safety-Related Systems, U.S. Department of Energy, Washington, DC, January 2006.
5. WSRC Memorandum LWO-WSE-2007-00028 from S.D. Burke to C.A. Everatt, "DNFSB Recommendation 2004-2 – Defense Waste Processing Facility (DWPF) Low Point Pump Pit (LPPP) Process Vessel Ventilation (PVV) and LPPP Building (Maintenance and Service Area) Ventilation Table 4.3 Submittal," April 18, 2007.
6. Interoffice Memorandum LWO-WSE-2007-00071 from M.M. Potvin to K. W. Stephens, "DNFSB Recommendation 2004-2 – Defense Waste Processing Facility (DWPF) Low Point Pump Pit (LPPP) Process Vessel Ventilation (PVV) and LPPP Building (Maintenance and Service Area) Ventilation Table 5.1 Submittal," May 17, 2007.
7. G-SYD-S-00050, DWPF System Design Description, Interarea Transfer Facilities, Rev 6, May 9, 2007
8. G-SYD-S-00018, DWPF System Design Description, DWPF SU-12, HVAC, Rev 6, December 31, 2005
9. W5BA239X, Building 511-S Ventilation, Rev 3
10. W5BC240X, LPPP Process Vessel Vent, Rev 4
11. WSRC-IM-2002-00014, SRS Air Emissions Monitoring Graded Approach, Rev 4

Attachment 1 – LPPP Building Ventilation Systems Description

Attachment 1 LPPP Ventilation Systems Descriptions

General Information:

Low Point Pump Pit

The Low Point Pump Pit (LPPP) is equipped with three pump tanks: the Sludge Pump Tank (SPT), the Precipitate Pump Tank (PPT), and the Recycle Pump Tank (RPT). The pump tanks are housed separately in contiguous concrete cells. The pump cells are below ground with the walls extending upward above the building floor. These cells are separated by shield walls and atmospherically connected through ventilation openings in the side walls of the center (recycle waste) cell. Each cell has seven removable concrete shield covers that form a barrier over the cell to protect and maintain the structural integrity of the cell and its contents.

Purge Systems

The LPPP Primary Purge System, consisting of ambient vaporizers and liquid nitrogen storage tank, provides a nitrogen source. The LPPP Primary Purge System does not rely upon electrical power. The LPPP Safety Grade Purge System, consisting of an ambient vaporizer and liquid nitrogen storage tank, provides a nitrogen source that initiates automatically in the event of loss of pressure in the LPPP Primary Purge System. The PPT purge flow instrumentation, the SPT purge flow instrumentation, and the nitrogen supply inventory instrumentation provide post accident monitoring capabilities. The LPPP Safety Grade Purge System does not rely upon electrical power.

Process Vessel Vent System

A process vessel vent system is provided at the LPPP to limit the release of radioactive materials, to control the atmosphere within the process tanks, and to limit radioactive particulate escape in the event of pit overpressurization. Outside air enters the cells after flowing through HEPA filters. The filters limit the possible release of radioactive particulates to the atmosphere in case of pit pressurization and backflow. Underground piping distributes the air to each cell. Air exits the pump cells and the sludge and recycle tanks to the surface-located ventilation equipment. A nitrogen flow through the SPT and PPT prevents the buildup of a combustible composition with hydrogen. The exhaust vapors are then diluted by the large air vent stream. The pump tanks andpit ventilation filtering equipment is adjacent to the pump pit building in a concrete-shielded enclosure with a rain cover.

Attachment 1 LPPP Ventilation Systems Descriptions

PVV Detailed Information: (refer to figure 3 and 4)

A process vent system is provided at the LPPP to continuously:

Maintain negative pressure in each pump tank vapor space with respect to the ambient pressure in the pump cell,

Remove radioactive particulates in the vessel vent gas and pump cell ventilation exhaust prior to discharge to the atmosphere.

The vent system includes inlet HEPA filters, a condenser, mist eliminator, steam heater, four HEPA filters, and two exhaust fans. All components except the inlet HEPA filters and exhaust fans are located within a shielded above-ground building south of the pump pit building. See Figure 1 for a simplified flow diagram of the vent system.

Outside air enters through two inlet HEPA filters. The filters prevent the possible release of radioactive particulates to the atmosphere in case of pump pit pressurization and backflow of air. Underground piping distributes the air to each pump cell. The inlet air flows through three different paths before joining in the vent system.

The main vent stream, which makes up about 90 percent of the total flow, ventilates the pump cells. Each cell receives approximately one third of the entering outside air. Large ventilation openings (40-in. diameter) in the walls between the cells allow the cell air to flow from the sludge cell to the recycle waste cell and then to the precipitate cell. From the precipitate cell, the air flows through a ventilation duct. The service area ventilation system which has a much larger air-moving capability, is also connected to this ventilation duct. A normally closed damper separates the two systems.

A small stream of air flows from the pump cell into the RPT and SPT through the individual tank overflow lines. The stream exits through vent jumpers, and combines in an underground vent line that connects to the vent system. The SPT exit stream will also include nitrogen from the tank purge. The stream flows through a condenser and mist eliminator, and joins the main cell air stream. The condenser, utilizing coolant from a closed-loop refrigeration package system, condenses moisture out of the air stream. Entrained moisture is removed by the mist eliminator. The condenser and mist eliminator drain to the recycle waste tank. The drain line has lead shielding to reduce radiation exposure during maintenance. The mist eliminator is supplied with flush water for cleaning. The air from the precipitate tank vent and the pump pit cell exhaust air enters the main vent stream downstream of the condenser and mist eliminator.

The third vent stream consists of cell air inleakage and nitrogen purge gas from the PPT. The vent stream exits the PPT through a jumper and flows through a dedicated line to the vent system.

The PPT vent stream joins the main cell air stream. The combined air stream flows to a steam coil heater, which raises the gas temperature to prevent condensation in the HEPA filters.

The gas from the heater flows to a filter system consisting of four parallel HEPA filters. Each filter has isolation valves and connection clamps with operatihg mechanisms that extend through the adjacent 1-ft thick shield wall. The valves and clamps are manually operated from outside the enclosure. This enables loaded HEPA filters to be isolated, removed, and replaced remotely using a crane.

The gas from the HEPA filters flows to one of two exhaust fans. One fan is operating while the other is on standby. Backup power is supplied to both fans. Air discharged from the exhaust fan is combined with service building HVAC air and exits through a stack to atmosphere.

Total vent system flow is controlled by modulating a control valve in the cell air exhaust duct. The required pressure differential between the precipitate pump cell and the process vent header is maintained by varying the speed of the exhaust fan.

PVV Flow Paths

Normal Cell Ventilation Flow (see figure 3)

Running PPV exhaust fan maintains a negative pressure in

Containment cells and process vessels

Air flows into cell containment area from

LPPP service area air through the cell covers

Fresh air from outside via bird screen and inlet HEPA filters

Each containment cell receives fresh outside air

Air from the sludge cell flows into the recycle cell

Air from recycle cell flows into the precipitate cell

All the air in the precipitate cell exits the precipitate containment cell

Dilution air valve regulates the flow of air exiting the precipitate containment cell

Dilution air valve is modulated to maintain a constant total flow through the PPV System

Exhaust fan speed adjusts to maintain constant ΔP between

Precipitate cell and PPV header pressure

Air flows through the vent heater

Temp is raised to prevent damage to HEPA filters

Outlet HEPA filters remove remaining particulate

PPV exhaust fan pulls suction on entire system causing air flow throughout the system

PPV exhaust fan discharges all air flow to the LPPP exhaust stack

Tank Ventilation Flow

PPV exhaust fan draws a suction on the three process tanks at LPPP

Process tank pressure is kept lower than cell pressure

Keeps air flow always from least contaminated to most

Air flows into the open overflow lines of the SPT and RPT

This air sweeps out the vapor space to ensure explosive condition not created

Nitrogen is supplied to the SPT and PPT

These two tanks have the potential to generate more hydrogen

Air, nitrogen, vapors/gases and particulate leaving the SPT and RPT immediately enter the PPV System

Attachment 1 LPPP Ventilation Systems Descriptions

PPV flow enters the vent condenser

Removes moisture in vent gases leaving the SPT and RPT by forcing it to condense

Removes some particulate as water vapor entrained in vent stream condenses around particles

High efficiency mist eliminator removes moisture from exhaust HEPA filter inlet

PPT stream is combined with the SPT and RPT stream just before the vent heater

PPT exhaust does not pass through the vent condenser or HEME

Original process benzene was present in the PPT

Benzene would condense out in the vent condenser and drain to the RPT which is not designed for benzene

Air flows through the vent heater

Temp is raised to prevent damage to HEPA filters

Outlet HEPA filters remove remaining particulate

PPV exhaust fan pulls suction on entire system causing air flow throughout the system

PPV exhaust fan discharges all air flow to the LPPP exhaust stack

Alternate Cell Ventilation Flowpath (see figure 2)

Maintenance inside the containment cells may require cell covers removal

Must ensure airflow is into the containment cell from the maintenance and service area

If the direction of flow is not into the cells radioactivity from the cells could contaminate

- LPPP maintenance and service area
- Personnel
- Environment

PPV System does not have the capacity to handle the large airflow that occurs with a removed containment cell cover

Alternate ventilation damper lineup is established when a cell is opened

Maintenance flowpath cross-connects the larger capacity 511-S Building Ventilation System with the smaller capacity PPV System

Cross-connection is accomplished by

Opening the normally closed pump pit cell ventilation damper

Almost fully closing the normally open maintenance and service area filter bank inlet damper

Primary suction point for the larger capacity 511-S Building Ventilation System is shifted to the precipitate cell instead of drawing from the maintenance and service area

Air is pulled into the cell containment area through the open cell cover(s)

Air still flows from cell to cell

Air containment cell air is removed from the precipitate tank cell

Attachment 1 LPPP Ventilation Systems Descriptions

Air from the precipitate tank cell enters an electric inlet heater

Raises temp of incoming air to prevent HEPA filter damage

The pump pit cell ventilation damper allows air flow to the maintenance and service area HEPA filter bank

Opened when shifting to maintenance mode on ventilation as first cell cover is removed

Maintenance and service area HEPA filter bank removes particulate

Maintenance and service area exhaust fan provides suction to pull air from the PPT containment cell

Air flow is directed to the LPPP stack

Detailed information LPPP Building (Maintenance and Service Area) Ventilation (refer to figure 4)

The HVAC system provides ventilation and contamination control for the Maintenance and Service Area The system is composed of louvers, exhaust ductwork, an electric heater, a shielded HEPA filter housing, an exhaust fan, and a stack. Outside air is supplied to the Maintenance and Service Area through six wall-mounted intake louvers with low-efficiency filters.

During normal operation, the potentially contaminated room exhaust air is drawn into the exhaust ductwork by the exhaust fan. The exhaust air flows through the ductwork to the HEPA filter housing, which is in a shielded enclosure located outside, adjacent to the main building at grade. The housing has a first stage of low-efficiency filters followed by the HEPA filters. From the filter housing, the air flows through the exhaust fan and flow control damper out to the stack for discharge to the atmosphere. The HVAC system also receives treated vent gas from the Process Vent System. This vent gas enters the HVAC system downstream of the exhaust fan for discharge to the atmosphere.

During operation with a pump pit cover open, the exhaust airflow path is changed in order to maintain contamination control. The system is sized for only half of any one pit cover to be open at a time. During this period, the room exhaust air is drawn down through the cell opening instead of the normal exhaust ductwork. The exhaust air flows through the cell and exits into an underground stainless steel exhaust duct, which leaves the pump pit and runs to the aboveground electric heater located inside the same shielded enclosure as the HEPA filter housing. The exhaust air is heated to prevent potential condensation plugging of the HEPA filters, exits the heater, enters the HEPA filter housing, and from there follows the same path as during normal operation.

Normal Flowpath

Air enters 511-S Building service & maintenance area through six intake louvers

Each louver equipped with low efficiency filters

Single exhaust fan provides necessary force to draw air through building

Air exits building and flows into HEPA filter bank

Attachment 1 LPPP Ventilation Systems Descriptions

In HEPA filter bank, air first flows through low efficiency filters, then HEPA filters

Air leaves HEPA filter bank and flows through exhaust fan variable inlet vanes and exhaust fan

Air leaves exhaust fan and flows through exhaust fan isolation damper

Air exits the system via LPPP exhaust stack, to atmosphere

Maintenance Cell Ventilation (Alternate) Flowpath

During process cell cover removal at LPPP, ventilation damper lineup is changed from normal to maintenance mode

Pump pit cell ventilation damper opens

HEPA filter bank inlet damper closes

Air enters LPPP process cells through open process cell top (cell cover lifted/removed) and flows through process cells

Air exits process cells into exhaust duct which connects process cells with HEPA filter bank

Air flows across electric heater, through pump pit cell ventilation damper and into HEPA filter bank

Air exits HEPA filter bank and flows through exhaust fan variable inlet vanes and exhaust fan

Air then flows through exhaust fan isolation damper, out LPPP exhaust stack to atmosphere

Figure 3 PVV System - Normal Configuration Flow Path

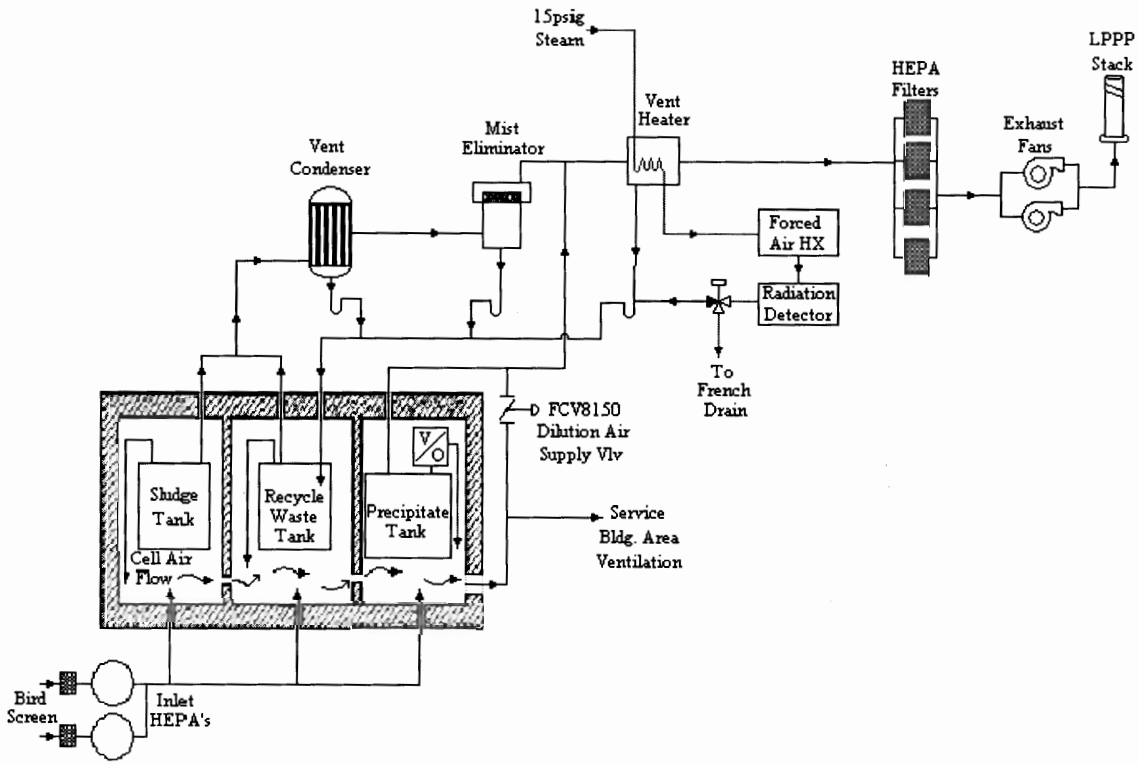

Figure 4 PVV System- Cell Cover Removed Configuration and Flowpath

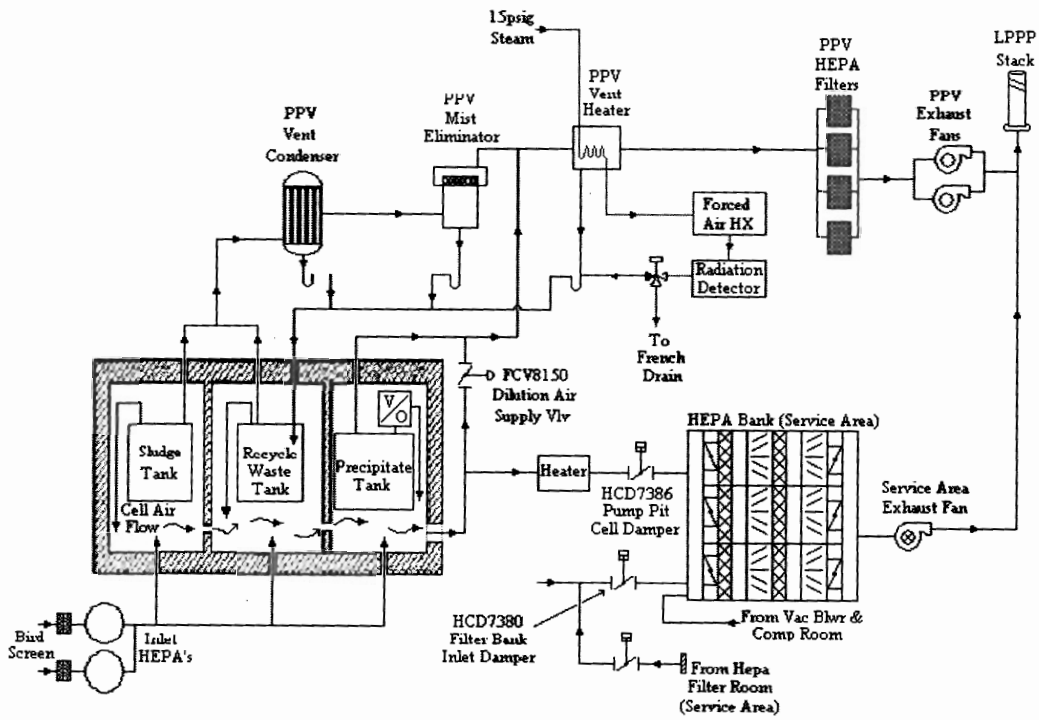

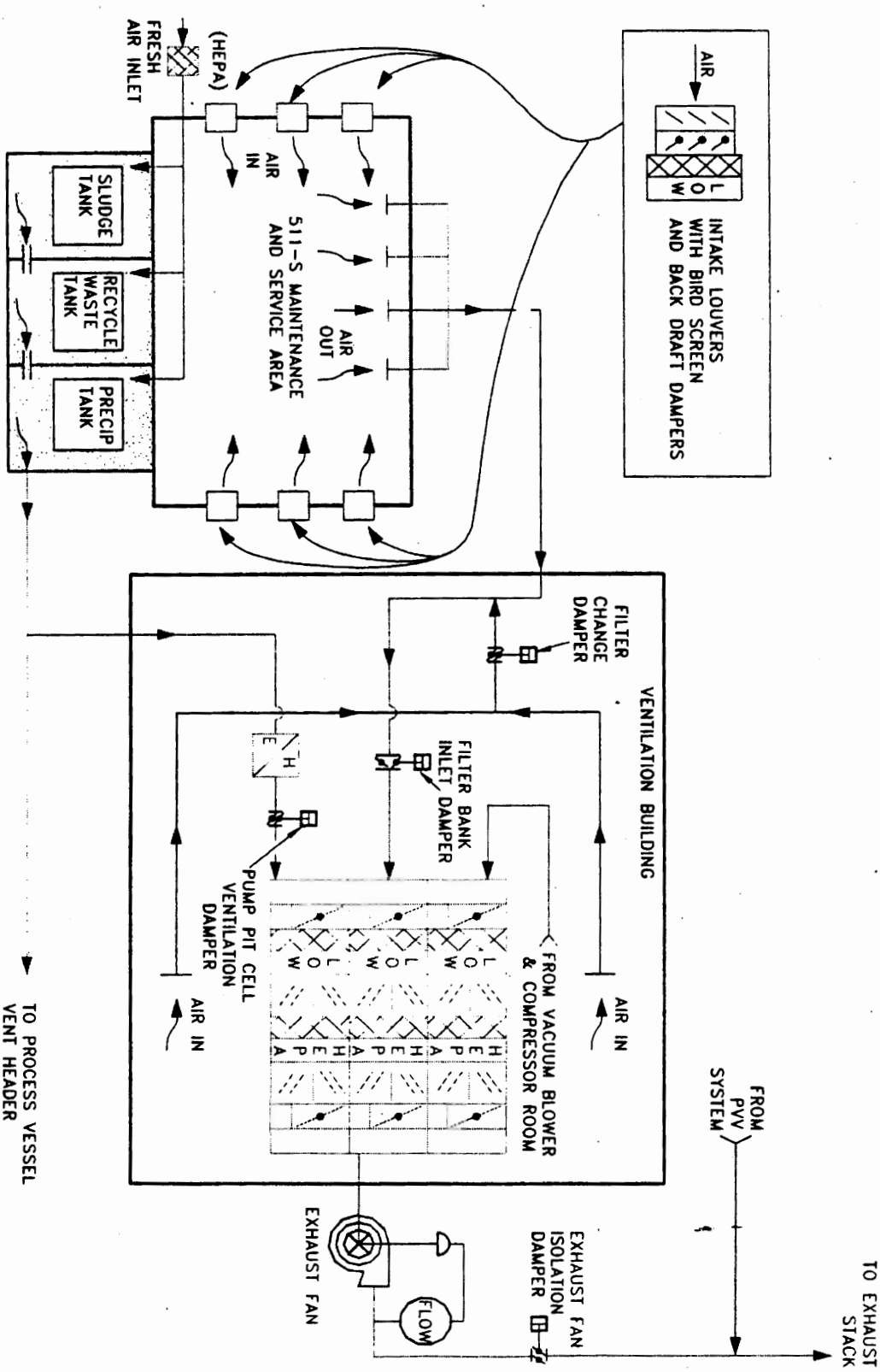

Figure 3 LPPP Building (Maintenance and Service Area) Ventilation

Attachment 2 – 2004-2 Table 4.3
LPPP Ventilation Systems

Attachment 2

2004-2 Table 4.3 - DWPF, LPPP PVV and LPPP Maintenance and Service Area Ventilation Systems

Confinement Documented Safety Analysis Information										
DWPF – Low Point Pump Pit (LPPP) Process Vessel Ventilation (PVV) and Building Ventilation				Hazard Category 2				Performance Expectations		
Bounding Accidents[3]	Type Confinement		Doses Bounding unmitigated / mitigated[1, 2]	Confinement Classification			Safety Function	Functional Requirements	Performance Criteria	Compensatory Measures
	Active	Passive		SC	SS	DID				
LPPP Propagated Vessels Explosion **(SPT and PPT Explode, RWT spills, SE pool fire** **(See Note #4)**			**<u>Unmitigated[5]</u>** **MOI = 0.86 rem** **CW = 400.6 rem** **<u>Mitigated</u>** **MOI = 0.86 rem** **CW = 0 rem**				**The ventilation systems at LPPP are not credited with a safety function.**			

Attachment 2

2004-2 Table 4.3 - DWPF, LPPP PVV and LPPP Maintenance and Service Area Ventilation Systems

Confinement Documented Safety Analysis Information										
DWPF – Low Point Pump Pit (LPPP) Process Vessel Ventilation (PVV) and Building Ventilation				Hazard Category 2				Performance Expectations		
Bounding Accidents[3]	Type Confinement		Doses	Confinement Classification			Safety Function	Functional Requirements	Performance Criteria	Compensatory Measures
	Active	Passive	Bounding unmitigated / mitigated[1, 2]	SC	SS	DID				
LPPP Building bounding spill/leak sludge material **(See Note # 6)**			**<u>Unmitigated</u>** **MOI < 0.1 rem** **CW = 17.8 rem** **<u>Mitigated</u>** **MOI = < 0.1 rem** **CW = 17.8 rem**				**The ventilation systems at LPPP are not credited with a safety function**			

Attachment 2

2004-2 Table 4.3 - DWPF, LPPP PVV and LPPP Maintenance and Service Area Ventilation Systems

Confinement Documented Safety Analysis Information										
DWPF – Low Point Pump Pit (LPPP) Process Vessel Ventilation (PVV) and Building Ventilation				Hazard Category 2				Performance Expectations		
Bounding Accidents[3]	Type Confinement		Doses	Confinement Classification			Safety Function	Functional Requirements	Performance Criteria	Compensatory Measures
	Active	Passive	Bounding unmitigated / mitigated[1, 2]	SC	SS	DID				
Seismic **(SPT and PPT Explode, RWT spills, SE pool fire) impacts LPPP** **(See Note #7)**			**Unmitigated[5]** **MOI = 0.86 rem** **CW = 400.6 rem** **Mitigated** **MOI = 0.86 rem** **CW = 10.05 rem**				**The ventilation systems at LPPP are not credited with a safety function.**			

Attachment 2

2004-2 Table 4.3 - DWPF, LPPP PVV and LPPP Maintenance and Service Area Ventilation Systems

Confinement Documented Safety Analysis Information										
DWPF – Low Point Pump Pit (LPPP) Process Vessel Ventilation (PVV) and Building Ventilation				Hazard Category 2				Performance Expectations		
Bounding Accidents[3]	Type Confinement		Doses	Confinement Classification			Safety Function	Functional Requirements	Performance Criteria	Compensatory Measures
	Active	Passive	Bounding unmitigated / mitigated[1, 2]	SC	SS	DID				
Tornado/high winds **(SPT and PPT Explode, RWT spills, SE pool fire) impacts LPPP** **(See Note #7)**			**<u>Unmitigated[5]</u>** **MOI = 0.86 rem** **CW = 400.6 rem** **<u>Mitigated</u>** **MOI = 0.86 rem** **CW = 0 rem**				**The ventilation systems at LPPP are not credited with a safety function.**			

Notes:

1. MOI – Maximally Exposed Offsite Individual; CW – Collocated Worker (100 meters).
2. A Leak Path Factor (LPF) of 1.0 was used in the unmitigated analyses. All MOI consequence dose values were taken from the DSA. The CW doses were taken from the following accident analyses calculations: S-CLC-S-00101, Vessel and Pool Fire Hydrogen/Isopar L Explosion Accident Analysis for ARP, MCU and DWPF Sludge Only Operations Rev 1, S-CLC-S-00102, ARP/DWPF with MCU-SE Coupled Operations Leaks and Spills Rev 1, and S-CLC-S-00106, DWPF Sludge, ARP, MCU SE Natural Phenomena: Earthquake and Tornado Rev 2, S-CLC-S-00107, Master Calculation Note for Defense Waste Processing Facility Safety Analysis Rev 1.
3. Acronym Definitions: Sludge Pump Tank (SPT), Precipitate Pump Tank (PPT), Recycle Pump Tank (RPT)
4. Vessel Explosions may be caused by loss of primary and safety grade N2 purge to the PPT or SPT. This may be caused by such events as NPH events, crane drop accident, vehicle crash. Note: Safety Grade N2 is functionally classified as Safety Significant.

A detonation in the vapor space of the PPT or the SPT overpressurizes all three pump pits, dislodging the cell covers. Collateral damage from pump pit wall failure or falling cell covers spills the contents of the RPT and jumpers into the pump pit. It is assumed that the Strip Effluent line is full and a break initiates a siphon to the LPPP from MCU. The organic in the Strip Effluent forms a floating layer of organic solvent in the pump pit, heats up and ignites leading to a pool fire. Collateral damage also fails the purge system for the remaining LPPP vessel, causing it to detonate as well. Subsequent releases unmitigated by filtration or deposition, continue for 4-days, after which the accident is assumed to terminate. Since LPPP ventilation has failed, no filtration is assumed; therefore, the total source term release to the environment is the same as the building release.

The offsite mitigated scenario is the same as the unmitigated scenario, since no SC controls are credited.

The LPPP primary N2 purge system is SS and provides flammability and explosion control of the PPT and SPT. The SS vault (pump pit cells) and cell covers perform a safety significant function to mitigate a release of radioactive materials.

The Onsite mitigated dose for this event is zero as vessel explosions/fires are prevented by the LPPP Primary and Safety Grade Purge Systems.

See 9.4.2.24 Explosions in the LPPP Precipitate Tank or Sludge Tank of WSRC-SA-6, Rev. 25 Final Safety Analysis Report Savannah River Site Defense Waste Processing Facility for additional details.

5.

LPPP Consequence Breakdown	Consequences	
	MOI (rem)	CW (rem)
Unmitigated		
Sludge Pump Tank Explosion	**0.561**	**189**
Precipitate Pump Tank	**0.275**	**96.9**
Strip Effluent Pool Fire	**0.021**	**7**
Strip Effluent Spill (2700 gallons)	**0.00007**	**97.3***
Recycle Pump Tank Spill	**0.00045**	**10**
Total	0.858	400.2

*** Dose represents inhalation dose from spill (0.0205 rem), resuspension for 96 hours (0.0311), and shine for 96 hours (97.2 rem).**

Neither the LPPP Building Ventilation nor the PVV are credited for vessel explosions and NPH events.

6. **During the operating mode, spills in the LPPP can release significant amounts of highly radioactive material into the sump. Primary initiators for this event are as follows:**

1. Vessel erosion/corrosion can result in the entire contents of a vessel being released to the cell.

2. Transfer errors, equipment malfunction, or plugging can cause an overflow in a LPPP vessel. Level monitoring and high level alarms are provided on LPPP vessels.

3. Jumper corrosion can result in a spill to the cell.

The bounding unmitigated scenario is assumed to progress as follows. An overflow occurs in the SPT causing a free fall spill of up to 15,000 gallons of sludge material onto the pump pit floor at a rate of 250 gpm. Subsequent releases unmitigated by filtration or deposition continue for 96 hours, after which the accident is assumed to terminate. The frequency of spills in the LPPP is anticipated.

The offsite mitigated scenario is the same as the bounding unmitigated scenario, since no SC controls are credited. The LPPP-SPT and PPT have the defense in depth SS function to maintain their structural integrity to contain their contents. A spill in the LPPP is mitigated by the SS vault (pump pit cells) and cell covers confinement.

See 9.4.2.12 Leaks in the Low Point Pump Pit and 9.4.2.14 Overflows in the Low Point Pump Pit of WSRC-SA-6, Rev. 25 Final Safety Analysis Report Savannah River Site Defense Waste Processing Facility for additional details

7. The NPH events serve as potential initiators to the vessel explosions and spills as described earlier and thus have the same consequences. Vessel Explosions may be caused by loss of primary and safety grade N2 purge to the PPT or SPT. The offsite mitigated scenario is the same as the bounding unmitigated scenario, since no SC controls are credited. The safety grade N2 purge is functionally classified as SS and meets Performance Criteria 2 for NPH events. The safety grade N2 purge would prevent the vessel explosions. In addition, the LPPP superstructures, vaults, cell covers, jumpers above the purge jumpers, and the SPT and PPT meet PC-2 criteria. As the RPT and SE jumper in the SPT cells not credited with meeting PC-2 DBE criteria, there would be a onsite dose associated with spills from these two components. From note 5 this would be 0.05 rem from the SE spill (97.3 rem minus the dose due to shine) plus 10 rem from the RCT spill for a total of 10.05 rem. (The shine dose is removed as the shield covers would survive a PC-2 level seismic event). Both the SE jumper and the RPT are located in PC-2 high wind qualified vaults and beneath PC-2 high wind qualified cell covers and are thus protected from the effects of a PC-2 high wind effect such that no release occurs. There would be no onsite dose associated with the material stored within the SPT, RPT, PPT and their cells during for a high wind event.

See 9.4.2.20 Earthquake and 9.4.2.21 High Winds of Explosions in the LPPP Precipitate Tank or Sludge Tank of WSRC-SA-6, Rev. 25 Final Safety Analysis Report Savannah River Site Defense Waste Processing Facility for additional details.

Attachment 3– 2004-2 Table 5.1
LPPP PVV System

Attachment 3

2004-2 Table 5.1 Ventilation System Performance Evaluation – DWPF, LPPP PVV Ventilation System

Evaluation Criteria	Discussion	Reference
	1 - Ventilation System – General Criteria	
Pressure differential should be maintained between zones and atmosphere.	**The Process Vessel Vent System (PVVS) was designed to meet the requirements of DOE Standard 6430.1A Sections 1300-7, 1550-99.0.1, 1550-99.02. Flow is provided from atmosphere and Low Point Pump Pit (LPPP) Building to process cells via piping and gaps in cell covers due to suction from the PVVS blower. Process tanks also have flow pulled through them via inleakage and overflow lines via the PVVS blower. The PVVS is designed to maintain a differential pressure between the tanks and cells via pressure controllers.** **Parameters of interest:** **PVV Air Flow (Indications FI8150) 1200 to 1600 scfm** **Tanks/Cell Difference (Indication PDI8761) 4 to 8 inwc** **Standard** **Nuclear Air Cleaning Handbook recommends a vacuum greater than or equal to 1 inwc (Table 2.6).** **Reference:** **SW4-15.87-2.3, LPPP Process Vessel Vent Startup** **W750294, Rev. 17** **W750152, Rev. 29** **W750494, Rev. 13** **Gap Analysis** **None**	DOE-HNBK-1169 (2.2.9) ASHRAE Design Guide
Materials of construction should be appropriate for normal, abnormal and accident conditions.	ASME AG-1 -2003, Code on Nuclear Air and Gas Treatment, was examined in regards to this issue, in particular the various Article XX-3000 Materials. Material of construction of items in contact with air is of stainless steel construction. Stainless steel is listed as an appropriate material. Standard Nuclear Air Cleaning Handbook recommends stainless steel for ductwork and housings. Gap Analysis None	DOE-HNBK-1169 (2.2.5) ASME AG-1

Attachment 3

2004-2 Table 5.1 Ventilation System Performance Evaluation – DWPF, LPPP PVV Ventilation System

Evaluation Criteria	Discussion	Reference
Exhaust system should withstand anticipated normal, abnormal and accident system conditions and maintain confinement integrity.	System is designed to: Maintain negative pressure in each pump tank vapor space with respect to the ambient pressure in the pump cell, and remove radioactive particulates in the vessel vent gas and pump cell ventilation exhaust prior to discharge to the atmosphere. Reference: G-SYS-S-00050, Interarea Transfer Facilities Gap Analysis None The DSA assumes ventilation confinement failure upon a tank explosion.	DOE-HNBK-1169 (2.4) ASHRAE Design Guide
Confinement ventilation systems shall have appropriate filtration to minimize release.	The exhaust HEPA filter system consists of four (4) 24x24x11.5 encapsulated filters installed in parallel. The casings are SST with 5-9/16" diameter inlet and outlet connections. Each filter is rated for approximately 650 CFM. Three filters are online to handle the system flow of 1400 CFM. Exhaust HEPA filters have an efficiency of 99.97% for 3 micrometer sized particle. The FSAR list a DF factor of 200. This factor is dependent on the PVVS remaining intact. Inlet filters have an efficiency of 99.97 and are installed in case of flow reversal. No credit is currently taken for HEPA filters in accident analysis. Standard Filters and housings are in compliance with the requirements of ASME N509 and AG-1 Section FK References AG-1 Section FK and OPS-DTG-960079, Engineering Path Forward S-PF-96-0121, Low Point Pump PIT Process Vessel Vent HEPA Filter DP DSA Chapter 9, 9.4.1.2, Disposition and Filtration Gap Analysis None	ASME AG-1 DOE-HNBK-1169 (2.2.1)

Attachment 3

2004-2 Table 5.1 Ventilation System Performance Evaluation – DWPF, LPPP PVV Ventilation System

Evaluation Criteria	Discussion	Reference
	2 - Ventilation System – Instrumentation & Control	
Provide system status instrumentation and/or alarms.	Monitored System Parameters: PVV Air Flow (Indications FI8150) 1200 to 1600 scfm Tanks/Cell Difference (Indication PDI8761) 4 to 8 inwc Alarms PVV HTR Cond Radiation Alarm (indication RI6850) 153 cpm (High) Dilution Air Flow (Indication FIC8150) 625 cfm (Low) PVV HEPA FLT DIF Press (Indication PDAL6846) low – switch The following other parameters are monitored: Air Pre-Heater Diff. Temp and alarms - TW/TE6845A/TDIC6865, TDAH/TDAL6865 LPPP Exhaust Air Temp and alarms -TW/TE8545B/TDIC6845, TDAH/TDAL6865 Vent Heater Condensate HIS6850 Diversion Valve TAH6850 Temp RAH6850 Radioactive Counts HEPA Filter Diff. Pressure – PDAH/PDAL6846 and HIHI PDAH6846A Process Vent System Air Flow – FIC8150/FAL8150 Process Vent System Diff. Press. Fan #1 - PDIT8761/PDIC8761, PDAH8761/PDAL8761 Inlet Valve Position Open/Closed – ZI8155 Fan 1, ZI4154 Fan 2 Exhaust Fan 2 – JI8760 Power, HIS8760 Control Exhaust Fan 1 –JI8762 Power, HIS8762 Control Exhaust Fan Lead/Lag Selector – HIS8763 Inlet HEPA Filter Diff. Pressure – PDAL/PDAH8152 Status of Enhanced Manual Operation (EMO) Program – Document # 14-511-007 TDIC6845 Air Pre-heater Diff. Temp.	ASME AG-1 DOE-HNBK-1169 ASHRAE Design Guide (Section 4)

Attachment 3

2004-2 Table 5.1 Ventilation System Performance Evaluation – DWPF, LPPP PVV Ventilation System

Evaluation Criteria	Discussion	Reference
	Standards In compliance with AG-1 Article IA-C-1000 References: SW4-15.87-2.3, LPPP Process Vessel Vent Startup SW4-4-1.11 (VOL 10) DV - LPPP Process Vent Alarm Response Procedure W750294, Rev. 17 W750152, Rev. 29 W750494, Rev. 13 Gap Analysis None	
Interlock supply and exhaust fans to prevent positive pressure differential.	There are no supply fans associated with the LPPP PVV System. Reference W750294, Rev. 17 W750152, Rev. 29 W750494, Rev. 13 Gap Analysis None	DOE-HNBK-1169 ASHRAE Design Guide (Section 4)

Attachment 3

2004-2 Table 5.1 Ventilation System Performance Evaluation – DWPF, LPPP PVV Ventilation System

Evaluation Criteria	Discussion	Reference
Post accident indication of filter break-through.	Low Differential Pressure Alarms are provided for the inlet and exhaust HEPA filters associated with the LPPP PVV System. These alarms are received locally (LCS) and on the DCS. • S-511001-PPV-PDSL-6846 HEPA FILTER DIFFERENTIAL PRESSURE SWITCH LOW • S-511000-PPV-PDSL-8152 HEPA FILTER DIFFERENTIAL PRESSURE SWITCH LOW Manual sampling of the exhaust stream leaving the LPPP ventilation Exhaust Stack can be performed via a quick connect fitting to the sample port using a portable pump when required. Note: SW4-1.9-2.6, Potential Release From LPPP, evaluates the need to shutdown the PVV System. <u>Reference</u> W750294, Rev. 17 W750152, Rev. 29 W750494, Rev. 13 <u>Gap Analysis</u> The lack of a continuous online monitoring system for the effluent air from the LPPP Stack is considered a discretionary gap in regards to Tech 34. WSRC-IM-2002-000014, SRS Air Emissions Monitoring Graded Approach, identified the LPPP as a potential impact category IV source. Monitoring requirements were changed from continuous to an annual grab sample. Due to the cost associated with maintaining the system, and the need to replace obsolete equipment, and the change in regulatory drivers, the continuous air monitoring system was removed by J-DCP-S-03017.	TECH-34

Attachment 3

2004-2 Table 5.1 Ventilation System Performance Evaluation – DWPF, LPPP PVV Ventilation System

Evaluation Criteria	Discussion	Reference
Reliability of control system to maintain confinement function under normal, abnormal and accident conditions.	Operation of the LPPP PVV System is controlled via approved operating procedures. Manipulations and monitoring of the system is performed via the DCS. Abnormal conditions are indicated by alarms. There is also an EMO 14-511-007, Enhanced Manual Operation LPPP Process Vessel Vent System. The EMO provides the following: If the pressure differential or the flow falls too low, the EMO will reverse the LEAD/LAG designation and start the new LEAD fan (both fans operating). If the pressure differential and flow is still below limits, the EMO will allow both fans to operate. If the pressure differential and flow are above limits, the EMO will stop the LAG fan (set No Lag status) and check the parameters again. If the pressure differential and flow are normal, the EMO will continue normal surveillance with the new LEAD fan operating. If the differential pressure or flow is still low, the EMO will generate a message that one fan can not maintain differential pressure and flow. If the LEAD fan stops or faults, the EMO will attempt to restart the LEAD fan. If the LEAD fan will not restart, the EMO will reverse the LEAD/LAG designation and attempt to start the new LEAD fan. SW4-1.11.1-AOP-S-8351, Loss of Low Point Pump Pit Process Vessel Ventilation provides directions and actions to restore flow and actions to take if flow is not restored. <u>References</u> **G-SYD-S-00050 IT-01, INTERAREA TRANSFER FACILITIES SYSTEM DESIGN DESCRIPTION, Rev. 5** <u>Gap Analysis</u> None, the DCS provides reliable control of the PVV Ventilation System.	DOE-HNBK-1169 (2.4)

Attachment 3

2004-2 Table 5.1 Ventilation System Performance Evaluation – DWPF, LPPP PVV Ventilation System

Evaluation Criteria	Discussion	Reference
Control components should fail safe.	LPPP PVV System Components Failure Modes • HCD7380, Cross tie between PVVS and Building/Service Area Ventilation, fails closed. • FCV8150, Dilution Air From Cell Vent, fails open • TCV6845, Steam to Heater, fails closed • HCV8154, Inlet Damper to Blower #1, fails as is. • HCV8155, Inlet Damper to Blower #2, fails as is. • SV6850, Vent Heater Condensate Diverting Valve, fails to the Recycle Waste Tank References W750294, Rev. 17 W750152, Rev. 29 W750494, Rev. 13 Gap Analysis None, on the loss of power or air, there would be a path from the tanks and cells to the stack that passes through the HEPA filters.	DOE-HNBK-1169 (2.4)

Attachment 3

2004-2 Table 5.1 Ventilation System Performance Evaluation – DWPF, LPPP PVV Ventilation System

Evaluation Criteria	Discussion	Reference
	3 - Resistance to Internal Events – Fire	
Confinement ventilation systems should withstand credible fire events and be available to operate and maintain confinement.	Gap Analysis: Existing facility – not required by accident analysis. F-FHA-S-00010 Fire Hazards Analysis for Defense Waste Processing Facility Building 511-S (Low Point Pit Facility), notes there are no automatic fire suppression systems and no automatic fire detection system for the Ventilation Building 511-1S. It does note that combustible loading is low and would not cause a severe fire. HEPA filters are constructed of low combustible material as required by code. Also, the FHA notes low combustibles in the cells. Blowers are located outside of the 511-S Building and have no automatic fire suppression systems and no automatic fire detection system. Combustible loading is low. The MCCs for the blowers (MCC B907 Cubicles 3A and 4A) are located in an electrical room with automatic fire suppression system (sprinklers) and automatic fire detection system.	DOE-HNBK-1169 (10.1) DOE-STD-1066
Confinement ventilation systems should not propagate spread of fire.	There is no fire detection or suppression equipment installed in the High Bay area of the Process Building. There is no interlock to shut down exhaust fan upon fire detection in any portion of the Process Building. Standards DOE-HNBK-1169 (10.1) DOE-STD-1066 References W776559, Rev. 18 F-FHA-S-00010, Rev. 2 TSR, Section 5.8.2.4, Facility Fire Protection Program Gap Analysis None, this is an existing facility and the accident analysis does not credit the non propagation of a fire.	DOE-HNBK-1169 (10.1) DOE-STD-1066

Attachment 3

2004-2 Table 5.1 Ventilation System Performance Evaluation – DWPF, LPPP PVV Ventilation System

Evaluation Criteria	Discussion	Reference
	4 - Resistance to External Events – Natural Phenomena – Seismic	
Confinement ventilation systems should safely withstand earthquakes.	Seismic event could initiate loss of power event and breach of confinement. Active confinement system is not credited in a seismic accident. Nitrogen purge of vessels is the means for preventing tank explosions during and following a seismic event. The functional classification of the PVVS has been changed is PS. No components have been evaluated for a seismic event and the system was not designed or rated to withstand an earthquake. Gap Analysis None - not required by the DSA	ASME AG-1 AA DOE 0420.1B DOE-HNBK-1169 (9.2)
	5 - Resistance to External Events – Natural Phenomena – Tornado/Wind	
Confinement ventilation systems should safely withstand tornado depressurization.	Active confinement system is not credited in a tornado accident by the DSA.	DOE 0420.1B DOE-HNBK-1169 (9.2)
Confinement ventilation systems should withstand design wind effects on system performance.	High wind could initiate loss of power and breach of HEPA filter confinement. The LPPP Superstructure, vaults, cell covers, and purge systems are PC-2 wind qualified. Reference S-CLC-S-00027, DWPF High Wind Analysis at LPPP and Cold Feed Makeup Facility. G-SYD-S-00050 IT-01, INTERAREA TRANSFER FACILITIES SYSTEM DESIGN DESCRIPTION, Rev. Gap Analysis None, the PVV Ventilation System is not credited by the FSAR for high wind events.	DOE 0420.1B DOE-HNBK-1169 (9.2)

Attachment 3

2004-2 Table 5.1 Ventilation System Performance Evaluation – DWPF, LPPP PVV Ventilation System

Evaluation Criteria	Discussion	Reference
	6-Other NP Events	
Confinement ventilation systems should withstand other NP events considered credible in the DSA where the confinement ventilation system is credited.	The LPPP PVV Ventilation System is not credited to perform any safety function during or following any other NP events.. Reference WSRC-SA-6 Gap analysis None.	DOE 0420.1B DOE-HNBK-1169 (9.2), Section 2.4 – Emergency Consideration
	7- Range Fires/Dust Storms	
Administrative Controls should be established to protect confinement ventilation systems from barrier threatening events	Savannah River Forestry Department is responsible for fire fighting efforts in regards to wildland fires. If the fire encroaches upon an operating area, the Savannah River Site Fire Department will direct extinguishing efforts. Ground cover around the Low Point Pump Pit is kept to a minimum. The Emergency Operating Center (EOC) per EPIP6Q-123, Graded ERO (Emergency Response Organization) Response, Attachment 3 Forest Fire, is responsible for providing protective actions for personnel and SRS facilities and equipment. Reference WSRC-SA-6 Gap analysis None	DOE 0420.1B

Attachment 3

2004-2 Table 5.1 Ventilation System Performance Evaluation – DWPF, LPPP PVV Ventilation System

Evaluation Criteria	Discussion	Reference
	8 - Testability	
Design supports the periodic inspection & testing of filters and housing, and test & inspections are conducted periodically.	Test connection ports are provided for periodic in place testing of the filters. 2Y1 Procedure 104, General Surveillance Testing of High Efficiency Particulate Air Filters, is performed periodically (18 months) as driven by the Work Management System - Passport. HEPA filter testing will be performed this year per Work Orders 751124, 751123, 751122, 751121. The design of the LPPP PVV system includes individual aerosol injection and sampling ports installed in the piping for each of the four encapsulated HEPA filters. The connections are located outside of the filter room in order to reduce potential exposure to filter testing personnel. These injection and sampling points meet the intent of ASME N510 for in-place leak testing of the PVV filters <u>Reference</u> Work Management System - Passport <u>Gap Analysis</u> None	DOE-HNBK-1169 (2.3.8) ASME AG-1 ASME N510
Instrumentation required to support system operability is calibrated.	All instrumentation is calibrated prior to being placed in service. Frequency driven calibration PMs are not in place for all instrumentation needed to support system operability. Key parameters are continuously monitored via the DCS in addition to the referenced EMO. Changes in system parameters and failure of equipment is typically detected via the DCS (alarms and trends) or the daily operator rounds. Operators respond via the appropriate alarm response procedures or by generating a work request for failed equipment/instrumentation. The cause of the equipment/instrument failure would be determined and appropriate corrective actions taken, including calibrating the instrument and verifications of alarms. <u>Reference</u> Work Management System - Passport <u>Gap Analysis</u> None	DOE-HNBK-1169 (2.3.8)

Attachment 3
2004-2 Table 5.1 Ventilation System Performance Evaluation – DWPF, LPPP PVV Ventilation System

Evaluation Criteria	Discussion	Reference
Integrated system performance testing is specified and performed.	LPPP PVV system under went extensive system testing and startup testing. System testing is performed via the operating procedures for the system, which establish operating criteria such as flow and differential pressure. The PVV is occasionally shut down and restarted. This, in addition to the normal operations of the system, provides assure that the system is reliable as the system response is seen to a wide range of demands. Modifications made to the system are required to undergo Post Modification Testing to ensure compliance with system performance requirements. There are currently no required response actions for the PVVS in the DSA. Standard DOE-HNBK-1169 (2.3.8) Gap Analysis None	DOE-HNBK-1169 (2.3.8)
9 - Maintenance		
Filter service life program should be established.	The facility has established a preventative maintenance program which requires that these filters undergo performance testing every 18 months. An additional PM requires that these filters be replaced every 7 years. In-place leak testing is performed for this HEPA filter system in accordance with Site Engineering Standards. Standards DOE Nuclear Air Cleaning Handbook 1169 Section 3.1 and Appendix C SRS Engineering Standard 15888 Reference Work Management System - Passport Gap Analysis None	DOE-HNBK-1169 (3.1 & App C)

Attachment 3
2004-2 Table 5.1 Ventilation System Performance Evaluation – DWPF, LPPP PVV Ventilation System

Evaluation Criteria	Discussion	Reference
	10 - Single Failure	
Backup electrical power shall be provided to all critical instruments and equipment required to operate and monitor the confinement ventilation system.	The LPPP PVVS receives backup diesel generator electrical power via MCC B907 Comp. 3A and 4A. Backup power is provided for the PVVS exhaust fan, all other instruments and equipment have backup electrical power. This is not required by FSAR. Reference W770093 Rev. 22 W772368 Rev. 14 W770137 Rev. 14 W770313 Rev. 16 W770131 Rev. 18 Gap Analysis None	DOE-HNBK-1169 (2.2.7)
	11 - Other Credited Functional Requirements	
Address any specific functional requirements for the confinement ventilation system (beyond the scope of those above) credited in the DSA.	The LPPP PVV System is not credited with any specific safety control in the DWPF DSA. References WSRC-SA-6, Rev. 25 Gap Analysis None	10CFR830, Subpart B

Attachment 4 – 2004-2 Table 5.1

LPPP Building (Maintenance and Service Area) Ventilation System

Attachment 4

2004-2 Table 5.1 Ventilation System Performance Evaluation – DWPF, LPPP Building (Maintenance and Service Area) Ventilation

Evaluation Criteria	Discussion	Reference
	1 - Ventilation System – General Criteria	
Pressure differential should be maintained between zones and atmosphere.	The 511-S Building Ventilation System provides air circulation for the maintenance and service areas. The LPPP Building Ventilation System removes any radioactive particles from air before discharging it to the environment. The 511S Building Ventilation System exhausts air from service/maintenance areas and vacuum blower room through high efficiency particulate air (HEPA) filters. Outside air is continuously drawn into the 511-S service/maintenance area via louvers located in the walls of the 511-S Building. The air is pulled out of the service/maintenance area via exhaust ducts and passed through a set of three HEPA filter banks. The HEPA filtered air is exhausted to atmosphere via the exhaust stack. The 511S Building Ventilation System can also provide a path for air flow through the process cells when one or more of the cell covers are removed for maintenance. The 511-S Building Ventilation System is design to maintain the service/maintenance area at a lower pressure relative to the environment for normal operating conditions. <u>Standards</u> DOE Nuclear Air Cleaning Handbook 1169 Section 2.2.9 – Confinement Selection Methodology <u>References</u> G-SYD-S-00018, rev. 6, DWPF *Facility, Facility Design Description, System HVAC* <u>Components/Instrumentation</u> None <u>Gap Analysis</u> Discretionary gap: No pressure differential instrumentation is installed to monitor pressure differential between the atmosphere and the Service Area.	DOE-HNBK-1169 (2.2.9) ASHRAE Design Guide

Attachment 4

2004-2 Table 5.1 Ventilation System Performance Evaluation – DWPF, LPPP Building (Maintenance and Service Area) Ventilation

Evaluation Criteria	Discussion	Reference
Materials of construction should be appropriate for normal, abnormal and accident conditions.	The material of construction for the 511-S Process Building Ventilation System filter housing is stainless steel (304L). The exhaust ventilation system ductwork is galvanized steel. The 511-S Process Building Ventilation exhaust fan is located on a concrete pad in an open area south of the Process Building and is exposed to the weather. The majority of the associated exhaust ductwork is located outside the Process Building and is exposed to the weather. Existing exterior ductwork and equipment material on the ventilation systems are subject to corrosion. Periodic inspections and System Health Performance Monitoring detect area in which maintenance is required.. The Process Building Ventilation HEPA filter unit is located in the 511-1S, HEPA Filter Building. Duct construction in accordance with Bechtel Technical Specification M-126 which was derived from SMACNA Standards. LPPP Building Ventilation System component materials have been adequate to meet system operational requirements. <u>Standards</u> DOE Nuclear Air Cleaning Handbook 1169 Section 2.2.5 - Corrosion ASME AG-1 <u>References</u> G-SYD-S-00018, rev. 6, DWPF *Facility, Facility Design Description, System HVAC* <u>Gap Analysis</u> None	DOE-HNBK-1169 (2.2.5) ASME AG-1

Attachment 4

2004-2 Table 5.1 Ventilation System Performance Evaluation – DWPF, LPPP Building (Maintenance and Service Area) Ventilation

Evaluation Criteria	Discussion	Reference
Exhaust system should withstand anticipated normal, abnormal and accident system conditions and maintain confinement integrity.	Normal system operation documents adequate system performance. The 511-S Process Building ventilation system was designed to operate within specified flow ranges (normal process) <u>Standards</u> DOE Nuclear Air Cleaning Handbook 1169 Section 2.2.4 - Emergency Considerations ASME AG-1 <u>Reference</u> G-SYD-S-00018, rev. 6, DWPF *Facility, Facility Design Description, System HVAC* <u>Gap Analysis</u> None.	DOE-HNBK-1169 (2.4) ASHRAE Design Guide

Attachment 4

2004-2 Table 5.1 Ventilation System Performance Evaluation – DWPF, LPPP Building (Maintenance and Service Area) Ventilation

Evaluation Criteria	Discussion	Reference
Confinement ventilation systems shall have appropriate filtration to minimize release.	The 511-S Building Ventilation System is equipped with a single Flanders E5 Filter Housing. The housing consists of a 12 filter HEPA filter bank arranged in 3 sections (Upper, Middle and Lower). Each section is 4 filters wide (4 x 3 arrangement). The HEPA filters are rated for 1500 cfm. All the filters banks remain online to handle the system flow of 18,000 cfm. Flow is reduced to 12,000 cfm when a section of HEPA filters require replacement. The unit is equipped with pre-filters; inlet and outlet isolation dampers to allow for filter change out and test connections for monitoring filter performance. Individual HEPA filters meet the requirements of SRS Engineering Standards Manual WSRC-TM-95-1, 15888 HEPA filter requirements and M-SPP-G-00243 HEPA Filter Specification. HEPA filter system meets the filtration requirements for normal operation. <u>Standards</u> DOE Nuclear Air Cleaning Handbook 1169 Section 2.2.1 Airborne Particulates and Gases ASME AG-1 Table FC-5140 SRS Engineering Standard 15888 ASME N509-2002 WSRC-TM-95-1, M-SPP-G-00243, HEPA Filter Specification. <u>References</u> G-SYD-S-00018, rev. 6, DWPF Facility, *Facility Design Description, System HVAC* <u>Gap Analysis</u> None.	ASME AG-1 DOE-HNBK-1169 (2.2.1)

Attachment 4

2004-2 Table 5.1 Ventilation System Performance Evaluation – DWPF, LPPP Building (Maintenance and Service Area) Ventilation

Evaluation Criteria	Discussion	Reference
	2 - Ventilation System – Instrumentation & Control	
Provide system status instrumentation and/or alarms.	The 511-S Building Ventilation System instrumentation provides local indication of each section of the HEPA Filter Assembly's Pre-Filter and HEPA Filter Differential Pressure (DP). Local system flow rate indication is also provided. A Common Trouble Alarm on the DCS alerts the 221-S Control Room Operator to a problem with the 511-S Building Ventilation System. The Common Trouble Alarm is received when a filter low or high DP alarm is actuated or when a system low flow alarm is actuated. Local instrumentation is adequate for normal operation Standards DOE Nuclear Air Cleaning Handbook 1169 ASHRAE Design Guide (Section 4) ASME AG-1 Reference G-SYD-S-00018, rev. 6, DWPF *Facility, Facility Design Description, System HVAC* Gap Analysis None.	ASME AG-1 DOE-HNBK-1169 ASHRAE Design Guide (Section 4)
Interlock supply and exhaust fans to prevent positive pressure differential.	The 511-S Building Ventilation System is not equipped with supply fans. All air flow through the system is produced by a single exhaust fan. Reference G-SYD-S-00018, rev. 6, DWPF *Facility, Facility Design Description, System HVAC* Gap Analysis None.	DOE-HNBK-1169 ASHRAE Design Guide (Section 4)

Attachment 4

2004-2 Table 5.1 Ventilation System Performance Evaluation – DWPF, LPPP Building (Maintenance and Service Area) Ventilation

Evaluation Criteria	Discussion	Reference
Post accident indication of filter break-through.	The 511-S Building Ventilation System is equipped with a locally-received low DP alarm for each HEPA filter section (Refer to Instrument & Control Section above). A Common Trouble Alarm on the DCS alerts the 221-S Control Room Operator to a problem with the 511-S Building Ventilation System HEPA filters. Manual sampling of the exhaust stream leaving the 511-S ventilation Exhaust Stack can be performed when required. Standards TECH-34 Reference G-SYD-S-00018, rev. 6, DWPF *Facility, Facility Design Description, System HVAC* Gap Analysis The lack of a continuous online monitoring system for the effluent air from the LPPP Stack is considered a discretionary gap in regards to Tech 34. WSRC-IM-2002-000014, SRS Air Emissions Monitoring Graded Approach, identified the LPPP as a potential impact category IV source. Monitoring requirements were changed from continuous to an annual grab sample. Due to the cost associated with maintaining the system, and the need to replace obsolete equipment, and the change in regulatory drivers, the continuous air monitoring system was removed by J-DCP-S-03017.	TECH-34
Reliability of control system to maintain confinement function under normal, abnormal and accident conditions.	The 511-S Building Ventilation System is controlled locally from a Local Control Station (LCS) located in the 511-S Instrument Shelter (511-2S). This system is not equipped with any remote control capability. The DCS is provided with a system Common Trouble Alarm, which when received requires investigation by a Field Operator. There are no redundant control functions associated with this system. Normal system operation has documented system performance and reliability. Standards DOE Nuclear Air Cleaning Handbook 1169 Section 2.4 ASME AG-1 Reference G-SYD-S-00018, rev. 6, DWPF *Facility, Facility Design Description, System HVAC* Gap Analysis None	DOE-HNBK-1169 (2.4)

Attachment 4

2004-2 Table 5.1 Ventilation System Performance Evaluation – DWPF, LPPP Building (Maintenance and Service Area) Ventilation

Evaluation Criteria	Discussion	Reference
Control components should fail safe.	The 511-S Process Building Ventilation System exhaust fan shuts down upon a loss of power. The fan discharge damper is designed to fail closed on a loss of power, or instrument air and is also electrically closed when the exhaust fan is shutdown. Standards DOE Nuclear Air Cleaning Handbook 1169 Section 2.4 ASME AG-1 Reference G-SYD-S-00018, rev. 6, DWPF *Facility, Facility Design Description, System HVAC* Gap Analysis None.	DOE-HNBK-1169 (2.4)
3 - Resistance to Internal Events – Fire		
Confinement ventilation systems should withstand credible fire events and be available to operate and maintain confinement.	The 511-S facility is equipped with fire detection and automatic fire suppression equipment in the FOS room areas of the Process Building. No fire detection or automatic suppression equipment is provided in the Service/Maintenance area of the 511-S. A fire in the Electrical Equipment Room or a fire in the cable trays along the south wall of the 511-S Building could result in a loss of the 511-S Building Ventilation System exhaust fan, however, the shutdown of the fan would result in the closing of the exhaust damper, and isolation of the ventilation system. The exhaust fan and the exhaust damper are located on a concrete pad, outside the 511-S Building, where there is little or no combustible material and the fire danger is minimal. Standards DOE-HNBK-1169 (10.1) DOE-STD-1066 References G-SYD-S-00018, rev. 6, DWPF *Facility, Facility Design Description, System HVAC* Gap Analysis Not required by accident analysis.	DOE-HNBK-1169 (10.1) DOE-STD-1066

Attachment 4

2004-2 Table 5.1 Ventilation System Performance Evaluation – DWPF, LPPP Building (Maintenance and Service Area) Ventilation

Evaluation Criteria	Discussion	Reference
Confinement ventilation systems should not propagate spread of fire.	There is no fire detection or suppression equipment installed in the Service/Maintenance area of the Process Building. There is no interlock to shut down exhaust fan upon fire detection in any portion of the Process Building. Standards DOE-HNBK-1169 (10.1) DOE-STD-1066 References G-SYD-S-00018, rev. 6, DWPF *Facility, Facility Design Description, System HVAC* Gap Analysis Not required by accident analysis.	DOE-HNBK-1169 (10.1) DOE-STD-1066
4 - Resistance to External Events – Natural Phenomena – Seismic		
Confinement ventilation systems should safely withstand earthquakes.	511-S Building Ventilation System is not Credited as being PC-2 qualified. Active confinement system is not credited in a seismic accident. Standards DOE Nuclear Air Cleaning Handbook 1169 Section 2.4 – Emergency Consideration UBC, 1979 SBC, 1979 Reference G-SYD-S-00018, rev. 6, DWPF *Facility, Facility Design Description, System HVAC* Gap Analysis The DSA does not credit the LPPP Building Ventilation System during or following a Seismic event.	ASME AG-1 AA DOE 0420.1B DOE-HNBK-1169 (9.2)

Attachment 4

2004-2 Table 5.1 Ventilation System Performance Evaluation – DWPF, LPPP Building (Maintenance and Service Area) Ventilation

Evaluation Criteria	Discussion	Reference
	5 - Resistance to External Events – Natural Phenomena – Tornado/Wind	
Confinement ventilation systems should safely withstand tornado depressurization.	511-S Building Ventilation System is not qualified for a tornado. Active confinement system is not credited in a tornado accident. Standards DOE Nuclear Air Cleaning Handbook 1169 Section 2.4 – Emergency Consideration Reference G-SYD-S-00018, rev. 6, DWPF *Facility, Facility Design Description, System HVAC* Gap Analysis The DSA does not credit the LPPP Building Ventilation System during or following a Tornado event.	DOE 0420.1B DOE-HNBK-1169 (9.2)
Confinement ventilation systems should withstand design wind effects on system performance.	511-S Building Ventilation System is not credited as being PC-2 qualified, however,the systems are designed for wind loads in accordance with Section 6.0 of Maximum Design Loads for Buildings and Other Structures, ANSI A58.1-1982, with the term (IV) equal to 110 mph in Equation 3 of Section 6.5.1. Building Structure and HEPA Filter Building are not PC-2. Building damage (peeling of metal panels) is expected to begin at 80 MPH winds. Standards DOE Nuclear Air Cleaning Handbook 1169 Section 2.4 – Emergency Consideration Reference G-SYD-S-00018, rev. 6, DWPF *Facility, Facility Design Description, System HVAC* S-CLC-S-00027, DWPF High Wind Analysis at LPPP and Cold Feed Makeup Facility. Gap Analysis The DSA does not credit the LPPP Building Ventilation System during or following a high wind event.	DOE 0420.1B DOE-HNBK-1169 (9.2)

Attachment 4

2004-2 Table 5.1 Ventilation System Performance Evaluation – DWPF, LPPP Building (Maintenance and Service Area) Ventilation

Evaluation Criteria	Discussion	Reference
	6-Other NP Events	
Confinement ventilation systems should withstand other NP events considered credible in the DSA where the confinement ventilation system is credited.	The Building 511-S Exhaust Ventilation System is not credited to perform any safety function during or following any other NP events.. Reference WSRC-SA-6 Gap analysis None.	DOE 0420.1B DOE-HNBK-1169 (9.2), Section 2.4 – Emergency Consideration
	7- Range Fires/Dust Storms	
Administrative Controls should be established to protect confinement ventilation systems from barrier threatening events	Savannah River Forestry Department is responsible for fire fighting efforts in regards to wildland fires. If the fire encroaches upon an operating area, the Savannah River Site Fire Department will direct extinguishing efforts. Ground cover around the Low Point Pump Pit is kept to a minimum. The Emergency Operating Center (EOC) per EPIP6Q-123, Graded ERO (Emergency Response Organization) Response, Attachment 3 Forest Fire, is responsible for providing protective actions for personnel and SRS facilities and equipment. Reference WSRC-SA-6 Gap analysis None	DOE 0420.1B

Attachment 4

2004-2 Table 5.1 Ventilation System Performance Evaluation – DWPF, LPPP Building (Maintenance and Service Area) Ventilation

Evaluation Criteria	Discussion	Reference
	8 - Testability	
Design supports the periodic inspection & testing of filters and housing, and test & inspections are conducted periodically.	The 511-S Building Ventilation System HEPA filter assembly is equipped with inlet and outlet testing fittings to allow for HEPA filter performance testing. The facility has established a preventative maintenance program which requires that these filters undergo performance testing every 18 months. An additional PM requires that these filters be replaced every 7 years. In-place leak testing is performed for this HEPA filter system in accordance with Site Engineering Standards. Standards DOE-HNBK-1169 (2.3.8) ASME AG-1 ASME N510 SRS Engineering Standard 15888 References G-SYD-S-00018, rev. 6, DWPF *Facility, Facility Design Description, System HVAC* Work Management System - Passport Gap Analysis None	DOE-HNBK-1169 (2.3.8) ASME AG-1 ASME N510

Attachment 4

2004-2 Table 5.1 Ventilation System Performance Evaluation – DWPF, LPPP Building (Maintenance and Service Area) Ventilation

Evaluation Criteria	Discussion	Reference
Instrumentation required to support system operability is calibrated.	All instrumentation is required to be calibrated prior to being placed in service. Instrumentation associated with the 511-S Building Ventilation System is not currently calibrated on a regular basis (not currently designated Installed Process Instrumentation – IPI). These instruments are calibrated upon installation, replacement and when a malfunction is suspected. Operator rounds and a DCS common trouble alarm are used to identify potential problems with instrumentation. Standards DOE-HNBK-1169 (2.3.8) References DWPF IPI Database Work Management System – Passport G-SYD-S-00018, rev. 6, DWPF *Facility, Facility Design Description, System HVAC* Gap Analysis None.	DOE-HNBK-1169 (2.3.8)
Integrated system performance testing is specified and performed.	The ventilation system under went system testing and startup testing. System testing is now performed via the operating procedures for the system, which establish operating criteria such as flow and differential pressure. The system is occasionally crossed tied to the PVV system, shut down, and restarted. This, in addition to the normal operations of the system, provides assure that the system is reliable as the system response is seen to a wide range of demands. Modifications made to the system are required to undergo Post Modification Testing to ensure compliance with system performance requirements. There are currently no required response actions for the system in the DSA. Standard DOE-HNBK-1169 (2.3.8) Gap Analysis None	DOE-HNBK-1169 (2.3.8)

Attachment 4

2004-2 Table 5.1 Ventilation System Performance Evaluation – DWPF, LPPP Building (Maintenance and Service Area) Ventilation

Evaluation Criteria	Discussion	Reference
	9 - Maintenance	
Filter service life program should be established.	The facility has established a preventative maintenance program which requires that these filters undergo performance testing every 18 months. An additional PM requires that these filters be replaced every 7 years. In-place leak testing is performed for this HEPA filter system in accordance with Site Engineering Standards. Standards DOE Nuclear Air Cleaning Handbook 1169 Section 3.1 and Appendix C SRS Engineering Standard 15888 Reference Work Management System - Passport Gap Analysis None	DOE-HNBK-1169 (3.1 & App C)
	10 - Single Failure	
Failure of one component (equipment or control) shall not affect continuous operation.	Does not apply to Safety Significant systems.	DOE O 420.1B, Facility Safety, Chapter 1, Section 3.b(8)
Automatic backup electrical power shall be provided to all critical instruments and equipment required to operate and monitor the confinement ventilation system.	Does not apply to Safety Significant systems.	DOE-HNBK-1169 (2.2.7)

Attachment 4

2004-2 Table 5.1 Ventilation System Performance Evaluation – DWPF, LPPP Building (Maintenance and Service Area) Ventilation

Evaluation Criteria	Discussion	Reference
Backup electrical power shall be provided to all critical instruments and equipment required to operate and monitor the confinement ventilation system.	There is no backup electrical power for the 511-S Building Ventilation System. Reference G-SYD-S-00018, rev. 6, DWPF *Facility, Facility Design Description, System HVAC* Gap Analysis Backup power is not provided for the ventilation fan. This is considered a discretionary gap for the 511-S Building Ventilation System as it is not functionally classified as SS.	DOE-HNBK-1169 (2.2.7)
11 - Other Credited Functional Requirements		
Address any specific functional requirements for the confinement ventilation system (beyond the scope of those above) credited in the DSA.	The 511-S Process Building Ventilation System is not credited with any specific safety control in the DWPF DSA. References G-SYD-S-00018, rev. 6, DWPF *Facility, Facility Design Description, System HVAC* Gap Analysis None; the DSA does not credit the LPPP Ventilation System during or following a DBA event.	10 CFR 830, Subpart B

Attachment 5 – DWPF LPPP Building Ventilation Systems Facility Evaluation Team

Jean Ridley – DOE-SR,

Michael Potvin- WSRC, FET Lead, Waste Solidification Engineering

Michael Potvin is a 1985 graduate of Virginia Polytechnic Institute and State University with a degree in Mechanical Engineering. Mike has been at the Savannah River Site for 22 years. Mike is currently assigned as a Principal Engineer at the Defense Waste Processing Facility (DWPF) where he is working in the area of safety analysis. While at DWPF, Mike has also served in the role as a plant/system engineer, Shift Technical Engineer, and Control Room Manager. He has also worked in the Reactor Works Engineering Department, where he served as a plant engineer specializing in predictive maintenance and as the manager of the predictive maintenance group.

Tom Berkery – WSRC, Waste Solidification Cognizant Engineer

Tom Berkery has worked as a mechanical engineer at the Savannah River Site for almost 19 years, including 3 years as a Shift Technical Engineer. His primary assignment has been as an HVAC system engineer for the DWPF and Saltstone facilities. Tom is a member of the SRS Ventilation and Filtration Technical Committee.

Al George – WSRC, Waste Solidification Cognizant Engineer

Al George has worked in System Engineering at the Savannah River Site for almost 20 years. His primary assignment has been as an HVAC system cognizant engineer for the DWPF facility.

Latricia Jones – WSRC, Waste Solidification Cognizant Engineer

Latricia Jones has a Bachelor of Science Degree in Mechanical Engineering from Michigan State University. She has worked at the Savannah River Site for 18 years. Latricia's work experience includes chemical receipt and processing, production computer systems, laboratory remote equipment, compressed gases, procurement, process ventilation, and participation in a facility startup. Latricia is currently working as the Design Authority for the Remote Sampling System, Flush Water System, and the Process Vessel Ventilation Systems for both the DWPF and 512-S Facilities at SRS.

Lynh Nguyen – WSMS, Safety Analysis Engineer

Lynh Nguyen has worked in the private sector as an environmental and process engineer at a chemical facility. She was a startup test engineer for several of the facility chemical processes. Lynh Nguyen has 9 years work experience in the field of safety analysis for Safety Basis documentation at the Savannah River Site. Her expertise has been in performing Hazard Analysis, Hazard Assessment Documentation, Auditable Safety Analysis, Health and Safety Plan, Chemical Analysis and Regulatory Services. She has developed and revised Documented Safety Analyses for DOE nuclear facilities. She has developed and implemented Hazards Analysis and Functional Classification training for various DOE nuclear facilities.

Bill Pitka – WSMS, Safety Analysis Engineer
William Pitka has a Nuclear Engineering Master Degree and has worked in the public and private sector for more than 25 years in design, startup and operation of nuclear facilities. He has operated nuclear plants for the United States Government and has been a startup engineer for 4 separate commercial nuclear reactors. William Pitka has more than 2 years work experience in the field of Nuclear Safety Analysis for Safety Basis documentation at the Savannah River Site. His expertise has been in performing Unanswered Safety Questions (USQ) reviews, Hazard Analysis, Hazard Assessment Documentation, Documented Safety Analysis, Technical Safety Requirements and other Regulatory Services.
Al Cross – WSRC, Waste Solidification Quality Engineer
Alan J. Cross is the Facility Quality Assurance Engineer for the Defense Waste Processing Facility (DWPF). He has a Bachelor of Science degree in physics from Georgia State University. He is retired from the United States Coast Guard. He has been at the Savannah River Site since 1989 were he has been assigned to the Quality Assurance organization for the Separations department and to DWPF since 1992.
Sinclair White, – WSRC, Waste Solidification Operations
Sinclair M. White is the Operations Day Support Manager at the Defense Waste Processing Facility (DWPF). He has been at the Savannah River Site for 24 years. He started work at DWPF in 1988 during the construction phase. He has work in various positions in operations including Vitrification Control Room Manager and Shift Manager. He is currently the Operations Technical Safety Requirements (TSRs) and TSR Surveillance Coordinator.