DOE F 1325.8

United States Government **Department of Energy (DOE)**

memorandum

Savannah River Operations Office (SR)

DATE: AUG 3 1 2007

REPLY TO ATTN OF: TSD (Mark A. Smith, 803-952-9613)

SUBJECT: Request for Concurrence with Recommendation of the Defense Nuclear Facilities Safety Board DNFSB) 2004-2 Final Report for the Savannah River Site (SRS) Defense Waste Processing Facility (DWPF)

TO: Dae Y. Chung, Deputy Assistant Secretary for Safety Management and Operations (EM-60), HQ

In accordance with the DNFSB 2004-2 Implementation Plan (IP) Deliverable 8.6.5 please find attached to this memorandum the DNFSB 2004-2 Final Report for the SRS DWPF. SRS recommends that no modifications or upgrades be made to the DWPF Vitrification Ventilation Exhaust systems. In accordance with IP deliverable 8.6.5, please provide Program Secretarial Officer concurrence with this recommendation within 90 days of receipt of this report.

If you have any questions, please contact me or have your staff contact Mark A. Smith at 803-952-9613.

Jeffrey M. Allison
Manager

TSD:MAS:bk

OSQA-07-0126

Attachment:
2004-2 Final Report for DWPF

cc w/o attachment:
Dr. Robert C. Nelson (EM-61), HQ
Percy Fountain (EM-3.2), HQ

SRS SITE EVALUATION TEAM CONCURRENCE
Final DNFSB 2004-2 Evaluation Report

Facility: **Defense Waste Processing Facility.** WSRC Letter NNP-PDC-2006-00016, dated July 24, 2007 Savannah River Site Defense Waste Processing Facility Vitrification Building, 221-S DNFSB Recommendation 2004-2 Ventilation System Evaluation"

Reference:

1. Commitment 8.6.3 of DNFSB 2004-2 Implementation Plan Revision 1, dated July 12, 2006

2. Ventilation System Evaluation Guidance for Safety-Related and Non-Safety-Related Systems, dated July 2006, Revision 1.

In accordance with the references above, the SRS Site Evaluation Team has reviewed and concurs with the submittal of the attached Defense Waste Processing Facility Vitrification Building, 221-S DNFSB Recommendation 2004-2 Ventilation System Evaluation Final Report.

Site Evaluation Team (SET) Concurrence:

Signature on file _____ 08/27/07
Mark A. Smith, DOE-SR, Site Lead for SET Date

Signature on file _____ 08/27/07
Ken W. Stephens, WSRC Lead for SET Date

SRS Site Evaluation Team consists of the following personnel:

DOE Site Lead and SET Chairman (Mark A. Smith, OSQA/TSD)
DOE Alternate Site Lead & Safety Basis SME (Don J. Blake, AMWDP/WDED)
DOE Ventilation System and Natural Phenomena Hazards SME (Brent J. Gutierrez, AMWDP/WDED)
WSRC 2004-2 Site Lead Ken W. Stephens (TQS/Nuclear Safety, Transportation, and Engineering Standards Dept. Mgr.)
WSRC Alternate Site Lead & Safety Basis SME (Andrew M. Vincent, M&O Chief Engineer Dept.)
WSRC Ventilation System SME (Scott J. MacMurray, SRNL Facility Engineering)
WSMS Safety Basis SME (Jerry L. Hansen)
WSRC SET Assistant Project Manager (Barbara A. Pollard, Nuclear Safety Dept.)

DOE-SR Mail Control
Cover Sheet
*** Incoming Mail ***

US DOE Savannah River Operations Office Mail Control Form SR-59

Thursday, August 9, 2007

Document Number:	071172	Correspondence Type:	Letter
Critical Designation:	Routine	Copy Type:	Original
Addressee:	OSQA 522G000000	Originator:	S. David Burke
Subject:	Savannah River Site Defense Waste Processing Facility Vitrification Building, 221-S, DNFSB Recommendation 2004-2 Ventilation System Evaluation (LWO-WSE-2007-00129)	Originating Org.:	WSRC
		Date Received:	08/09/2007
		Document Date:	07/24/2007
		Classification:	Unclassified
		Assigned To:	TSD 522G100000
		Compliance Date:	
Manager Signature Required:	No	Suspense Date:	
Remarks:		Distribution:	TSD OSQA WDED AMWDP

If This Document is Incorrectly Assigned PLEASE Return Immediately to DOE Mail Control or Forward to the Correct Office and Notify DOE Mail Control

SAVANNAH RIVER SITE
Aiken, SC 29808 • www.srs.gov

RECEIVED
2007 AUG -9 AM 7:56
MAIL CONTROL

July 24, 2007

LWO-WSE-2007-00129

Carl A. Everatt, Director
Office of Safety and Quality Assurance
P.O. Box A
Aiken, SC 29808

071172

Dear Mr. Everatt:

Subject: Savannah River Site Defense Waste Processing Facility Vitrification Building, 221-S DNFSB Recommendation 2004-2 Ventilation System Evaluation

This letter transmits the final report of DNFSB Recommendation 2004-2, Active Confinement Systems for the Defense Waste Processing Facility (DWPF) Vitrification Building, 221-S, at the Savannah River Site (SRS). This is in accordance with the DOE guidance provided in "Ventilation System Evaluation Guidance for Safety-Related and Non-Safety Related Systems", Revision 0, January 2006, and "2004-2 Ventilation System Evaluation Guidance Addendum," March 6, 2007.

The Vitrification Building is a Hazard Category 2. The Zone 1 Exhaust Ventilation System is Performance Category 2 (PC-2) qualified and has the Safety Significant (SS) function of mitigating the effects of internal radiological process events with a minimum Decontamination Factor (DF) of 200 by maintaining negative pressure in the Vitrification Building, which causes transport of airborne radionuclides from the process area through the Sand Filter. Zone 2 and Zone 3 Ventilation Systems are functionally classified as Production Support (PS) due to the low consequences to both onsite (< 1.0 rem) and off-site receptors (< 0.1 rem) from postulated events. They are not credited nor required to perform an active confinement function during DBAs since the releases are filtered through the Zone 1 Ventilation System, which is credited for mitigation.

In accordance with DOE 2004-2 evaluation guidance, SRS evaluated the ventilations systems for the Vitrification Building using the Safety Significant (SS) criteria identified in Table 5.1 due to the functional classification of the Zone 1 Exhaust Ventilation System and for Zone 2 and Zone 3 Ventilation Systems due to Vitrification Building being a Hazard Category 2 facility. To assess functionally for applicable NPH events, PC-2 criteria were used if the system was required for the event by the safety analysis. This was per the guidance given in "2004-2 Ventilation System Evaluation Guidance Addendum."

The lack of a continuous online monitoring system for the effluent air from the Zone 2 Exhaust is considered a discretionary gap in regards to Tech 34. WSRC-IM-2002-000014, SRS Air Emissions Monitoring Graded Approach, identified the Zone 2 effluent as a potential impact category III source. Monitoring requirements were changed from continuous to quarterly grab sample. Due to the cost associated with maintaining the system, and the need to replace obsolete equipment, and the change in regulatory drivers, the continuous air monitoring system was removed by J-DCP-S-03018. The guidance provided in 2004-2 Ventilation System Evaluation Guidance Addendum was used to eliminate NPH gaps where the FSAR did not credit Zone 2 or Zone 3 Ventilation System for providing mitigation. No mandatory gaps were identified were identified that would affect the ability of the Zone 1, Zone 2 and Zone 3 Ventilation Systems to perform as required during normal, abnormal, or accident conditions. A cost/benefit study was performed for the modification required to provide continuous online monitoring system for the Zone 2 effluent and for making the Zone Exhaust Stack monitoring system PC-2 qualified. These evaluations are summarized in Section 3 of the report.

Based on these evaluations, the Facility Evaluation Team recommends that no modifications/upgrades to the Vitrification Ventilation Exhaust Systems be made. The Site Evaluation Team has reviewed the report and concurs with the Facility Evaluation Team.

Facility Evaluation Team Concurrence:

Jean M Ridley — 7/24/07
Jean Ridley
DOE Waste Disposition Engineering
Date

Michael Potvin — 7/24/07
Michael Potvin, FET Lead
Waste Solidification Engineering
Date

Sincerely,

S. David Burke — 7/30/07
S. David Burke
Waste Solidification Engineering Chief Engineer
Date

CC:

K. Stephens, 730-2B
I. Lewis, 766-H
W. Van-Pelt, 766-H
M. Smith, 730-B
K. A. Hauer, 766-H
S. Wilkerson, 704-S
L. T. Nguyen, 704-S

LWO-WSE-2007-00083
Revision 0

Savannah River Site
Defense Waste Processing Facility
Vitrification Building, 221-S

DNFSB Recommendation 2004-2
Ventilation System Evaluation
Revision 0
July 2007

SAVANNAH RIVER SITE
Aiken, SC 29808 · www.srs.gov

PREPARED FOR THE U.S. DEPARTMENT OF ENERGY UNDER CONTRACT NO. DE-AC09SR18500

Review and Approval

Facility Evaluation Team Concurrence:

Jean M. Ridley — 7/24/07
Jean M. Ridley
DOE Waste Disposition Engineering
Date

7/24/07
Michael M Potvin, FET Lead
Waste Solidification Engineering
Date

7/30/07
S. David Burke
Waste Solidification Chief Engineer
Date

TABLE OF CONTENTS

Page

Acronyms 4
Definitions 6
Executive Summary 7
1. Introduction 9
   1.1 Vitrification Process Overview 9
   1.2 Vitrification Building Ventilation Systems 12
   1.3 Major Modifications 12
2. Functional Classification Assessment 13
   2.1 Existing Classification 13
   2.2 Evaluation 13
   2.3 Summary 14
3. System Evaluation 14
   3.1 Identification of Gaps 15
   3.2 Gap Evaluations 15
   3.3 Modifications and Upgrades 16
4. Conclusion 17
References 17
Attachment 1 – Vitrification Building Ventilation System Description 19
Attachment 2 – 2004-2 Table 4.3 Zone 1 Exhaust Ventilation System 27
Attachment 3 – 2004-2 Table 4.3 Zone 2 and Zone 3 Ventilation Systems 42
Attachment 4 – 2004-2 Table 5.1 Zone 1 Exhaust Ventilation System 45
Attachment 5 – 2004-2 Table 5.1 Zone 2 and Zone 3 Ventilation Systems 59
Attachment 6 – DWPF Vitrifiation Building Ventilation Systems Facility Evaluation Team 72

Acronyms

ARP	Actinide Removal Process
BUOGCT	Backup Offgas Condensate Tank
CMA	Crane Maintenance Area
CDC	Canister Decontamination Cell
CDMC	Contact Decontamination and Maintenance Cell
CPC	Chemical Process Cell
CW	Co-located Worker (100 meters)
DBA	Design Basis Accidents
DBE	Design Basis Earthquake
DCS	Distributed Control System
DF	Decontamination Factor
DNFSB	Defense Nuclear Facilities Safety Board
DOE	Department of Energy
DSA	Documented Safety Analysis
DSS	Decontaminated Salt Solution
DWPF	Defense Waste Processing Facility
EOP	Emergency Operating Procedure
ETP	Effluent Treatment Project
FOS	Field Operation Station
FSAR	Final Safety Analysis Report
GWSB	Glass Waste Storage Building
HEPA	High Efficiency Particulate Air
LPPP	Low Point Pump Pit
LCO	Limiting Condition of Operation
MAR	Material at Risk
MC	Melt Cell
MCC	Motor Control Center
MCU	Modular Caustic-Side Extraction Unit
MFT	Melter Feed Tank
MOI	Maximally Exposed Offsite Individual
MRS	Manipulator Repair Shop
MST	Monosodium Titanate
NP	Natural Phenomena

NPH	Natural Phenomena Hazard
OGCT	Offgas Condensate Tank
PC	Performance Category
PHA	Preliminary Hazard Analysis
PHR	Process Hazard Review
PPT	Precipitate Pump Tank
PRFT	Precipitate Reactor Feed Tank
PS	Production Support
RBA	Radiological Buffer Area
RCT	Recycle Collection Tank
REDC	Remote Equipment Decontamination Cell
REM	Roentgen Equivalent Man
RPC	Remote Process Cell
RPCP	Remote Process Cell Plenum
RS	Regulated Shop
SC	Safety Class
SE	Strip Effluent
SEFT	Strip Effluent Feed Tank
SME	Slurry Mix Evaporator
SMECT	Slurry Mix Evaporator Condensate Tank
SPC	Salt Process Cell
SPT	Sludge Pump Tank
SRAT	Sludge Receipt and Adjustment Tank
SRS	Savannah River Site
SS	Safety Significant
TOC	Total Organic Carbon
TSR	Technical Safety Requirements
WTC	Weld Test Cell

Definitions

Active Confinement Ventilation System	A ventilation system that uses mechanical means (e.g., blower) to circulate air within, and remove air from a building or building space through filtration. (DOE-HDBK-1169-2003, DOE Nuclear Air Cleaning Handbook)
Confinement	A building, building space, room, cell, glovebox, or other enclosed volume in which air supply and exhaust are controlled, and typically filtered. (DOE-HDBK-1169-2003, DOE Nuclear Air Cleaning Handbook)
Confinement System	The barrier and its associated systems (including ventilation) between areas containing hazardous materials and the environment or other areas in the facility that are normally expected to have levels of hazardous material lower than allowable concentration limits. (DOE-HDBK-1169-2003, DOE Nuclear Air Cleaning Handbook)
Hazard Category	Hazard Category is based on hazard effects of unmitigated release consequences to offsite, onsite and local workers. (DOE-STD-1027-92, Hazard Categorization and Accident Analysis Techniques for Compliance with DOE Order 5480.23, Nuclear Safety Analysis Reports)
Performance Category	A classification based on a graded approach used to establish the NPH design and evaluation requirements for structures, systems and components. (DOE-STD-1021-93, Natural Phenomena Hazards Performance Categorization Guidelines for Structures, Systems and Components)
Ventilation System	The ventilation system includes the structures, systems, and components required to supply air to, circulate air within, and remove air from a building/facility space by natural or mechanical means. (DOE-HDBK-1169-2003, DOE Nuclear Air Cleaning Handbook)

Executive Summary

This confinement ventilation evaluation is for the Defense Waste Processing Facility (DWPF) Vitrification Building, 221-S, at the Savannah River Site (SRS). This evaluation was developed in accordance with the Department of Energy (DOE) evaluation guidance for Defense Nuclear Facility Safety Board (DNFSB) Recommendation 2004-2, "Ventilation System Evaluation Guidance for Safety-Related and Non-Safety-Related Systems," Revision 0, January 2006 and "2004-2 Ventilation System Evaluation Guidance Addendum," March 6, 2007. The ventilations systems for the Vitrification Building, 221-S were identified as a part of the SRS Waste Solidification 2004-2 evaluation scope. This evaluation included the Zone 1, Zone 2 and Zone 3 active ventilation systems.

The design of the Vitrification Building incorporates multiple confinement levels to minimize releases of radioactivity to the environment and to minimize transport of radioactive contaminants within the facility. The primary confinement for the radioactive material at the DWPF consists of the process vessels and piping, process vent systems, and glass canisters. The DWPF processes take place in the closed vessels located in the Remote Process Cells (RPC). The DWPF chemical process tanks produce gaseous byproducts that contain radioactive material. The process vent facilities collect and treat these byproducts. The vitrification process takes place in the melter and also produces radioactive gaseous byproducts. The melter offgas treatment facilities collect and treat these byproducts. After treatment, all of the process gases are transferred to the Zone 1 Ventilation Exhaust System for further filtration by the sand filter before being released to the stack.

A second level of confinement for the radioactivity in the process cells consists of the canyon structure and the Zone 1 ventilation system. The system is designed to keep these areas at a negative pressure relative to the adjoining corridors in order to ensure that any airflow is into the Zone 1 areas. Within Zone 1, airflow is from areas with relatively low contamination to areas with higher levels of contamination. The Zone 1 Ventilation System exhausts through a highly efficient sand filter that removes most of the particulate radioactivity before being released to the stack. Radiological Buffer Area (RBA) corridors surround the portions of the canyon structure that contain openings. These corridors are served by the Zone 2 ventilation system. Although radioactive contamination is not expected in the RBA, it is possible that contamination could be present under abnormal or upset conditions. The RBA and the Zone 2 ventilation system, therefore, serve to confine any airborne radioactive material that could potentially escape from the Zone 1 areas. The Zone 2 ventilation system exhausts through HEPA filters to reduce the amount of radioactivity released to the environment. The Zone 3 Ventilation System provides ventilation and comfort conditioned air to radiologically clean areas in the Vitrification areas. It also serves as a supply of air to the Zone 2 Ventilation System. The Zone 3 Ventilation System prevents the spread of airborne radioactive contamination from the Vitrification Building to the environment by maintaining all Zone 3 areas at a positive pressure with respect to Zone 1 and 2, and at a negative pressure with respect to the atmosphere.

The Vitrification Building is a Hazard Category 2 facility.

The hazard analysis for the Vitrification Building identified accidents that could lead to consequences exceeding the offsite and onsite Evaluation Criteria according to SRS procedure E7, 2.25 Functional Classification, Revision 3. These accidents include explosions in the process vessels, spill and leaks, uncontrolled reactions, breach of the melter offgas system, seismic and tornado/high winds. The bounding event, seismic impact on the Vitrification Building, yielded unmitigated offsite dose of 9.75 rem (95% meteorology and 100 cm surface roughness) and 3535 rem (50% meteorology and 100 cm surface roughness) for collocated workers (Leak Path Factor of 1.0 was used). The explosion events are prevented with Safety Class controls, such as purge

of the process vessels. This results in a mitigated offsite dose of 0.81 rem, with the majority of the dose due to 4 days of release from a breach of the melter offgas system (0.8 rem). The Zone 1 Exhaust Ventilation System is Performance Category 2 (PC-2) qualified and has the Safety Significant (SS) function of mitigating the effects of internal radiological process events with a minimum Decontamination Factor (DF) of 200 by maintaining negative pressure in the Vitrification Building, which causes transport of airborne radionuclides from the process area through the Sand Filter. Applying a DF of 200 results in a mitigated onsite consequence of 2.63 rem.

In accordance with the DOE 2004-2 Evaluation Guideline and 2004-2 Ventilation System Evaluation Guidance Addendum, SRS evaluated the Zone 1 Exhaust System at 221-S using SS criteria to develop DNFSB 2004-2 Ventilation Performance Criteria, Table 5.1. No gaps, mandatory or discretionary, were identified that would affect the ability of the Zone 1 Ventilation System to perform during normal, abnormal, accident conditions, and credited NPH events. A cost/benefit study was performed for the modification required to upgrade/replace continuous online monitoring system for the Zone 1 effluent with one that was PC-2 NPH qualified. This evaluation is summarized in Section 3 of this report.

Zone 2 and Zone 3 Ventilation Systems are functionally classified as Production Support (PS) due to the low consequences to both onsite (< 1.0 rem) and off-site receptors (< 0.1 rem) from postulated events. They are not credited nor required to perform an active confinement function during DBAs since the releases are filtered through the Zone 1 Ventilation System, which is credited for mitigation. WSRC-PH-93-17, Rev. 1, Vitrification Building HVAC Process Hazards Review (PHR) PHR 200-S-382 and WSRC-TR-94-0586, Rev. 0, Defense Waste Processing Facility Preliminary Hazards Analysis were reviewed to verify the events Zone 2 Ventilation System mitigated. The events included operational/mechanical failures; fire, explosions, air reversal, tornados, high wind and seismic events resulting in the release of radiological material and/or chemicals. The worst case events with respect to receptor radiological doses were seismic and high winds. The Zone 2 Exhaust Ventilation System discharges through banks of HEPA filters that provide a minimum Decontamination Factor (DF) of 200. The Zone 3 system exhausts as a Zone 2 supply and any airborne radioactivity would be mitigated by the Zone 2 exhaust system. A flow reversal from Zone 3 to the atmosphere is assumed to have a Leak Path Factor of 1 and provides no mitigation.

In accordance with the DOE 2004-2 Ventilation System Evaluation and 2004-2 Ventilation System Evaluation Guidance Addendum, SRS assessed the DWPF Vitrification Building Zone 2 and 3 Ventilation Systems against the Safety Significant performance criteria identified in Table 5.1. The lack of a continuous online monitoring system for the effluent air from the Zone 2 Exhaust is considered a discretionary gap in regards to Tech 34. WSRC-IM-2002-000014, SRS Air Emissions Monitoring Graded Approach, identified the Zone 2 effluent as a potential impact category III source. Monitoring requirements were changed from continuous to quarterly grab sample. Due to the cost associated with maintaining the system, and the need to replace obsolete equipment, and the change in regulatory drivers, the continuous air monitoring system was removed by J-DCP-S-03018. The guidance provided in 2004-2 Ventilation System Evaluation Guidance Addendum was used to eliminate NPH gaps where the FSAR did not credit Zone 2 or Zone 3 Ventilation System for providing mitigation. No mandatory gaps were identified that would affect the ability of the Zone 2 and Zone 3 Ventilation Systems to perform during normal, abnormal, or accident conditions. A cost/benefit study was performed for the modification required to provide continuous online monitoring system for the Zone 2 effluent. This evaluation is summarized in Section 3 of this report.

Based on these evaluations, the Facility Evaluation Team recommends no modifications/upgrades to the Vitrification Ventilation Exhaust Systems.

1. Introduction

1.1 Vitrification Process Description

Refer to figure 1 and figure 2.

Feed material to the Vitrification Building 221-S currently includes sludge slurry from H-Area. Future feed material will include monosodium titanate (MST)/Sludge Solids produced by the Actinide Removal Process (ARP) in 512-S and Strip Effluent (SE) produced by the Cs-137 stripping process in Modular Caustic-Side Extraction Unit (MCU). Radioactive sludge is transferred from waste tanks in H-Area to the Low Point Pump Pit (LPPP) sludge tank as required to support DWPF operation. The LPPP sludge tank transfers sludge to the Sludge Receipt and Adjustment Tank (SRAT) in the Chemical Process Cell (CPC). MST/Sludge Solids and/or SE may be added. In ARP, Salt Solutions are treated with MST, to adsorb actinides and Sr-90, and to allow concentration of MST/Sludge Solids by filtration in 512-S. The concentrated MST/Sludge Solids stream is transferred to the Precipitate Reactor Feed Tank (PRFT) in the Vitrification Building via the LPPP-Precipitate Pump Tank (PPT). The Filtrate is transferred to MCU in H-Area where the Cs-137 is stripped producing an SE stream that is sent to the DWPF Strip Effluent Feed Tank (SEFT) via the LPPP-Sludge Pump Tank (SPT) Cell. The resultant MCU Decontaminated Salt Solution (DSS) stream is sent to Tank 50 for disposal at the Saltstone Facility. The MST/Sludge Solids stream from the PRFT and the SE stream from the SEFT are transferred to the SRAT and mixed with the sludge feed. Nitric acid and formic acid are added to the SRAT. Formic acid is used to reduce mercury compounds in the sludge to mercury. Nitric acid is added, as required, to control redox or rheological properties of the slurry. In the SRAT, the elemental mercury is steam distilled to a decanting/wash tank. Mercury is periodically removed from the wash tank and transferred to the mercury recovery and purification facilities in the laboratory area. Frit is added to the sludge mixture after it is transferred from the SRAT to the Slurry Mix Evaporator (SME). The solid-liquid ratio of the sludge-frit slurry is adjusted by evaporation, and the sludge-frit slurry mixture is then transferred to the Melter Feed Tank and fed into the melter at a controlled rate.

The melting process is accomplished in a slurry-fed, joule-heated melter. The melt process incorporates high level radioactive waste into a solid, borosilicate glass matrix. The melter is fed an aqueous slurry of waste and glass-forming material (frit). The molten glass is poured into a stainless steel canister.

Figure 1 Waste Streams

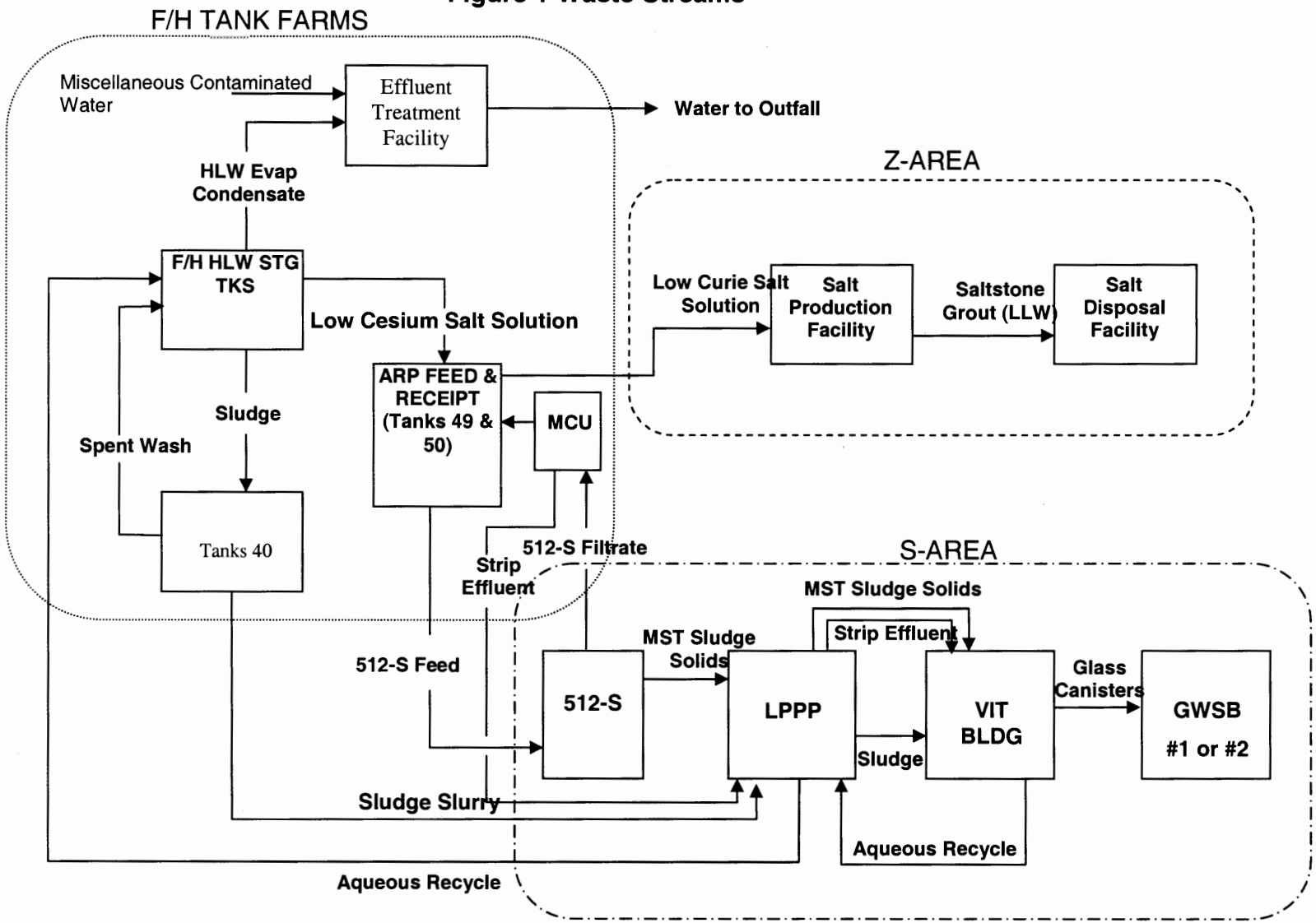

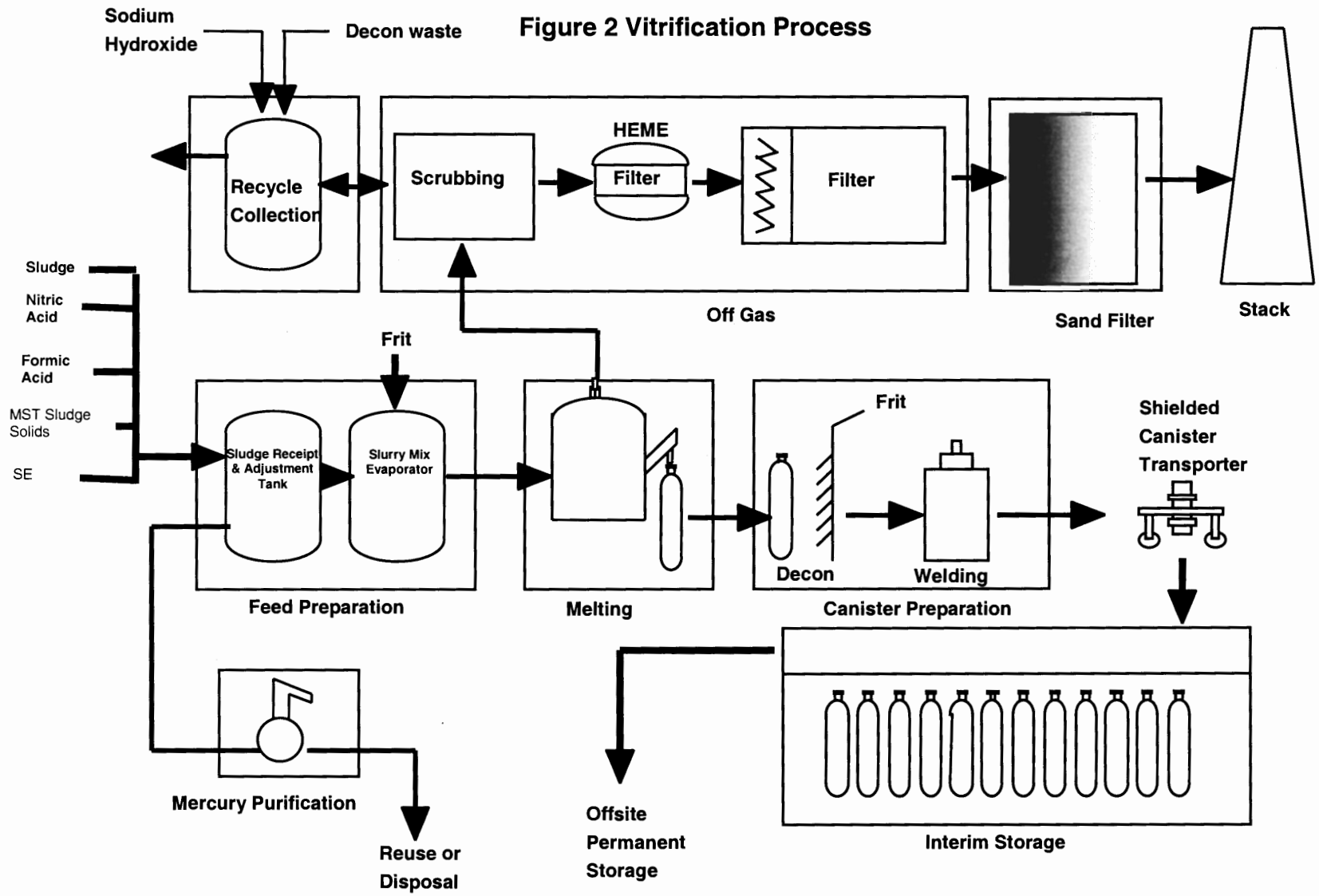

Figure 2 Vitrification Process

1.2 Vitrification Building Ventilation Systems

The design of the Vitrification Building incorporates multiple confinement levels to minimize releases of radioactivity to the environment and to minimize transport of radioactive contaminants within the facility. The primary confinement for the radioactive material at the Defense waste Processing (DWPF) consists of the process vessels and piping, process vent systems, and glass canisters. The DWPF processes take place in the closed vessels located in the Remote Process Cells (RPC). The DWPF chemical process tanks produce gaseous byproducts that contain radioactive material. The process vent facilities collect and treat these byproducts. The vitrification process takes place in the melter and also produces radioactive gaseous byproducts. The melter offgas treatment facilities collect and treat these byproducts. After treatment, all of the process gases are transferred to the Zone 1 Ventilation Exhaust System for further filtration by the sand filter before being released to the stack.

A second level of confinement for the radioactivity in the process cells consists of the canyon structure and the Zone 1 ventilation system. The system is designed to keep these areas at a negative pressure relative to the adjoining corridors in order to ensure that any airflow is into the Zone 1 areas. Within Zone 1, airflow is from areas with relatively low contamination to areas with higher levels of contamination. The Zone 1 HVAC system exhausts through a highly efficient sand filter that removes most of the particulate radioactivity before being released to the stack. Radiological Buffer Area (RBA) corridors surround the portions of the canyon structure that contain openings. These corridors are served by the Zone 2 ventilation system. Although radioactive contamination is not expected in the RBA, it is possible that contamination could be present under abnormal or upset conditions. The RBA and the Zone 2 ventilation system therefore serve to confine any airborne radioactive material that could potentially escape from the Zone 1 areas. The Zone 2 ventilation system exhausts through HEPA filters to reduce the amount of radioactivity released to the environment.

The process areas of the Vitrification Building are divided into three zones for purposes of ventilation and contamination control. Zone 1 contains the areas with the highest potential for contamination and Zone 3 includes the areas with the lowest potential for contamination. Therefore, the air pressure is maintained highly negative for Zone 1 and slightly negative for Zone 3. The areas contained in each zone are as follows:

Zone 1: Zone 1 includes the Chemical Process Cell (CPC), the Salt process Cell (SPC), the Crane Maintenance Area (CMA), the Canister Decontamination Cell (CDC), the Melt Cell (MC), the Remote Equipment Decontamination Cell (REDC), the Remote Process Cell Plenum (RPCP), the Contact Decontamination Maintenance Cell (CDMC), the Railroad Well, the Analytical Cell, and the Sample and Mercury Purification Cells. The Weld Test Cell (WTC) is also characterized as Zone 1; however, it is maintained at slightly positive pressure relative to the remainder of Zone 1.

Zone 2: Zone 2 is subdivided into zones 2 and 2B. Zone 2 includes all normally occupied radiological areas with potential for contamination, such as the operating and service corridors on levels 1 and 3, all Regulated Shops (RS), Manipulator Repair Shop (MRS), and the Railroad Well Air Lock. These areas are at a higher pressure than Zone 1 areas.

Zone 2B: Zone 2B is the operating space between Zone 2 and Zone 1 areas. This zone includes the analytical lab and sampling cell hoods, the mercury distillation hood and storage cabinet, and two cell entry/exit hoods. The pressure in these areas is less than that in Zone 2.

Zone 3: Zone 3 includes clean offices, Field Operating Stations (FOS) 1 and 2, clean machine shops, clean equipment area, and other clean personnel areas on level 2. These areas are

maintained at a positive pressure relative to areas in Zones 1, 2 and 2B. However, Zone 3 pressure is slightly below atmospheric outdoor pressure.

See Attachment 1 for further Vitrification Building Ventilation description and figures.

1.3 Major Modifications

There are no Major Modifications currently underway or planned for the Vitrification Building

2. Functional Classification Assessment

2.1 Existing Classification

The Zone 1 Exhaust Ventilation System is functionally classified as SS and PC-2. It has the safety function of mitigating the effects of internal radiological process events with a minimum Decontamination Factor (DF) of 200 by maintaining negative pressure in the Vitrification Building, which causes transport of airborne radionuclides from the process area through the Sand Filter. The Zone 2 and Zone 3 Ventilation Systems are functionally classified as PS.

2.2 Evaluation

The hazard analysis for the Vitrification Building identified accidents that could lead to consequences exceeding the offsite and onsite Evaluation Criteria according to SRS procedure E7, 2.25 Functional Classification, Revision 3. (Process related internal events that are not covered by external or NPH events are assumed to be credible events, regardless of frequency. An evaluation was performed that evaluated the accidents defined in the DWPF Preliminary Hazards Analysis, Probabilistic Safety Analysis, Consolidated Hazard Analysis for the 512-S Facility and DWPF Transfer Lines, WTL Consolidated Hazard Analysis and in the Facility Safety Analysis Report to determine the impact of eliminating the frequency cut off to define credible scenarios for internal events in response to Manual E7, Procedure 2.25 Revision 14. Based on the evaluation, it was found that no internal events with significant consequences were eliminated from controls consideration based on frequency, and therefore, no further evaluation is required for compliance with Manual E7, Procedure 2.25 Revision 14.) These accidents include explosions in the process vessels, spills and leaks, uncontrolled reactions, breach of the melter offgas system, seismic and tornado/high winds. The bounding event, seismic impact on the Vitrification Building, yielded unmitigated offsite dose of 9.75 rem (95% meteorology and 100 cm surface roughness) and 3535 rem (50% meteorology and 100 cm surface roughness) for collocated workers (Leak Path Factor of 1.0 was used). The explosion events are prevented with Safety Class purge of the process vessels. (The PRFT and the SEFT utilize both Safety Class purge and high temperature interlocks to prevent vessel explosions. The feed to the SRAT and the conditions under which it may be fed to the SRAT are controlled to prevent accumulation of organics in the SRAT and to prevent condensation of the organics in the downstream offgas stream.) This results in a mitigated offsite dose of 0.81 rem, with the majority of the dose due to 4 days of release from a breach of the melter offgas system (0.8 rem). The Zone 1 Exhaust Ventilation System is PC-2 qualified and has the Safety Significant function of mitigating the effects of internal radiological process events with a minimum Decontamination Factor (DF) of 200 by maintaining negative pressure in the Vitrification Building, which causes transport of airborne radionuclides from the process area through the Sand Filter. This results in a mitigated onsite consequence of 2.63 rem.

Zone 2 and Zone 3 Ventilation Systems are not credited nor required to perform an active confinement function during these DBAs since the releases are filtered through the Zone 1 ventilation system, which is credited for mitigation. WSRC-PH-93-17, Vitrification Building HVAC Process Hazards Review (PHR) PHR 200-S-384, Rev 1 (6/7/93) and Plant Hazards Surveys Checklist For 221-S Vitrification Building included in WSRC-TR-94-0586, Defense Waste Processing Facility Preliminary Hazard Analysis (PHA), Rev. 0, December 1994 were reviewed as being sources for potential unmitigated events and associated consequences.

The following is a summary of events from the Surveys Checklist for 221-S Vitrification Building included in the PHA, WSRC-TR-94-0586:

- Explosion-Pyrophoric Material Releases
- Pressurized Gas Explosion Releases Contamination
- Fire Releases Contamination
- Breach of Canister
- Breach of Cell Window
- Breach of Sample Vial
- HEPA Filter Breach, and
- Chemical Confinement Breach

PHR 200-S-384, WSRC-PH-93-17, also adds events for air flow reversal and seismic and tornado events. The events from the PHA and PHR are bounded by the seismic and tornado events (see Attachment 2, Table 1). Radiological consequences associated with Zone 2 and Zone 3 (offsite < 0.1 rem and onsite < 1 rem) did not challenge the Evaluation Guidelines; therefore, there are no credited controls. The Zone 2 Exhaust Ventilation System discharges through banks of HEPA filters which are not credited, but can provide a minimum Decontamination Factor (DF) of 200. This value is base on the DF given in Table 9.4-8 of Final Safety Analysis Report Savannah River Site Defense Waste Processing Facility for HEPA filters at the Low Point Pump Pit. The Zone 3 system exhausts as a Zone 2 supply and any airborne radioactivity would be mitigated by the Zone 2 exhaust system. A flow reversal from Zone 3 to the atmosphere is assumed to have a Leak Path Factor of 1 and provides no mitigation.

2.3 Summary

The Zone 1 Exhaust Ventilation System is appropriately classified as SS and the Zone 2 and 3 Ventilation Systems as PS.

3. System Evaluation

SRS evaluated the Vitrification Building confinement ventilation systems in accordance with Defense Nuclear Facility Safety Board (DNFSB) Recommendation 2004-2, "Ventilation System Evaluation Guidance for Safety-Related and Non-Safety-Related Systems," Revision 0, January 2006 and "2004-2 Ventilation System Evaluation Guidance Addendum," March 6, 2007.. Tables 4.3 (Attachments 2 and 3) were developed from the DWPF FSAR, PHR, and PHA events. Systems were evaluated and documentation was reviewed to confirm system configuration by the associated System Cognizant Engineers. System configurations were evaluated against the criteria in Table 5.1 and documented in Attachments 4 and 5. "2004-2 Ventilation System Evaluation Guidance Addendum," March 6, 2007, was used as justification to eliminate gaps that

were based on evaluating a PS system against SS criteria in which the FSAR did not credit the PS system.

3.1 Identification of Gaps

This assessment evaluated the Vitrification Building Ventilation systems and supporting structures, systems and SS/PC-2 criteria. The methodology and events chosen were previously documented in Table 4.3 and submitted to DOE (References 7, 9).

The SS classification and the associated attributes in Table 5.1 were used as a guide so that the active confinement ventilation systems could be evaluated to a common set of criteria. The Zone 1 Exhaust System is functionally classified as SS, thus any gap found would be a mandatory gap. Since the Zone 2 and Zone 3 Ventilation Systems are functionally classified as PS, modifications or closure recommendations to close any identified gap would be discretionary in nature.

3.2 Gap Evaluations

Each of the Vitrification Building Ventilation systems was compared with SS system performance criteria in Table 5.1 of Reference 5. In order to perform this evaluation, ventilation and support systems documentation was reviewed to confirm system configuration. Systems were then evaluated against the criteria in Table 5.1 and the Addendum.

No gaps were identified with the Zone 1 Exhaust Ventilation System. The continuous online Zone 1 Exhaust Stack Monitoring system is not qualified or credited in the DSA for NPH events which is not a gap in accordance with the Addendum. There would be a project cost of $2,565,000 ($1,795,500 to $3,847,500) to upgrade the current system with a NPH PC-2 qualified system. This is a Class 5 estimate prepared by Site Estimating.This cost may increase depending on the ability to qualify components. There would not be a dose reduction associated with this upgrade. The upgrade would only result in an additional benefit of allowing for an assessment of the radioactive material leaving the facility following a PC-2 seismic event. Typically such an assessment would be based on field measurements taken by radiological control inspectors accompanying local response teams and measurements obtained as part of the Savannah River Site response to such an event. Use of the consequences given in the FSAR should provide an initial bounding assessment as they do not account for any deposition of the source material prior to reaching the sand filter and are typically given for a period of 96 hours.

The lack of a continuous online monitoring system for the effluent air from the Zone 2 Exhaust is considered a discretionary gap in regards to Tech 34. WSRC-IM-2002-000014, SRS Air Emissions Monitoring Graded Approach, identified the Zone 2 effluent as a potential impact category III source (potential effective dose equivalent of ≤0.1 mrem/year and > 0.00001 mrem/year). Monitoring requirements were changed from continuous to quarterly grab sample. Due to the cost associated with maintaining the system, and the need to replace obsolete equipment, and the change in regulatory drivers, the continuous air monitoring system was removed by J-DCP-S-03018. It is estimated that the project cost to reinstall a continuous online monitoring system would be $6,294,000 ($4,405,800 to $9,441,000) with an additional cost of $1,167,000 ($816,900 TO $1,750,000) for upgrading the system to being PC-2 NPH qualified. This is a Class 5 estimate prepared by Site Estimating. This does not include the cost associated with qualifying the Zone 2 Exhaust System to function during and after a PC-2 NPH event. The FSAR does not credit Zone 2 for providing any mitigation for design basis accidents as the consequences associated with events that Zone 2 could mitigate are < 0.1 rem for the MOI and

< 1 rem for the CW. The Zone 2 Exhaust System also provides sets of HEPA filters within the Vitrification Building to provide additional filtration of higher potential areas (WTC and Labs) prior to reaching the inlet plenum HEPAs of the Zone 2 Exhaust.

3.3 Modifications and Upgrades

Upgrade Continuous air monitoring system for Zone 1 stack with PC-2 qualification and with emergency power and safety significant: (SS design classification)
Scope:
Provide UPS and normal 120vac power to various instrumentation
Reroute power, control, DeltaV cables
Route cables, conduit, piping
Locate all electrical component
Revise P&ID and logic diagram, schematic diagram, cable block diagram, raceway layout, SDD, piping, data sheets, scaling sheets
Prepare Purchase req, DCP, AIM, PDMS, instrumentation list, CLI
Procurement/construction/startup/P&CS coordination
SIL calculations
Seismic qualification
Safety significant design implementation
SCDHEC

An upgrade to the Zone 1 online continuous stack monitor to meet PC-2 seismic requirements is not recommended. It would only provide additional benefit during a PC-2 seismic event and provide data that would also be collected by both local and site response teams. The conservative consequence calculations would provide initial basis for providing estimates of potential exposure to personnel, both on and off site. There is no direct dose reduction associated with the upgrade as personnel would still be dispatched as needed to fulfill emergency response actions.

Install Continuous air monitoring system for 221-S, Zone 2 stack. (PS design classification)
Scope: (See the attached flow diagrams for the complete system)
Provide connection to existing HP vacuum system.
(Each HP vacuum system consists of dual 100% capacity vacuum blowers that provide force to draw for the effluent air monitoring system)
Install Isokinetic sample probes (Four).
Provide four Air sampler includes local flow meter that provides indication of the air sample flow rate, Geiger Mueller tube.
Two CAMs.
Provide Local radiation monitor panel includes transmitter RIT, high radiation switch RSH, RAH, HS, local annunciation and radiation high alarm.
Install Flow signal conditioning panel.
Install flow control panels include, FE, FT, FSL, FIC, FY, FCV, US
Provide DeltaV signals for Radiation indicator low scale, Flow alarm, Radiation indicator high scale, and Radiation alarm high, trouble alarms.
Provide UPS and normal 120vac power to various instruments
Reroute power, control, and DeltaV cables
Route cables, conduit, piping connections to HP vacuum system, instrument tubing
Locate all electrical component, piping, instrumentations and fittings, mechanical equipment like vacuum blowers, silencers, and valves
Revise P&ID and logic diagram, schematic diagram, cable block diagram, raceway/equipment

layout, SDD, piping, data sheets, and scaling sheets
Prepare Purchase req, DCP, AIM, PDMS, instrumentation list, CLI
Procurement/construction/startup/P&CS coordination
SCDHEC

Install Continuous air monitoring system for 221-S, Zone 2 stack same as above with PC-2 qualification and with emergency power and safety significant. (SS design classification)
Scope:
Same as above 3a and
SIL calculations
Seismic qualification
Safety significant design implementation

It is not recommended that the Zone 2 stack monitoring system be upgraded to a continuous online system due to the low consequences associated with potential releases from the Zone 2, the filtration provided individual HEPA filter banks prior to the Zone 2 Exhaust HEPA Filter banks, and the guidance provided by WSRC-IM-2002-000014, SRS Air Emissions Monitoring Graded Approach. There is no direct dose reduction associated with the upgrade as personnel would still be dispatched as needed to fulfill emergency response actions.

4. Conclusion

The ventilation systems for the Vitrification Building were evaluated via Table 4.3 to determine their effect on dose reduction to both the offsite and onsite receptors. This confirmed both their functional classification and the benefit that could be realized provided there were no gaps in their functional requirement as given by Table 5.1 and the FSAR. The evaluation of the Vitrification Ventilation Systems did not reveal any gaps which affect the functionality of the systems as required during normal, abnormal, accident conditions, and NPH events as credited in the FSAR. No modifications are required. The Zone 1 Exhaust System, which is appropriately classified as SS and PC-2 qualified, will provide mitigation for events as described in the FSAR and well as its normal process filtering. The Zone 2 and 3 Ventilation Systems, which are appropriately classified as PS, are not required by the FSAR for response to DBAs. The Zone 2 Exhaust Ventilation System will provide its design required filtering of exhaust air from both Zone 2 and Zone 3 areas. The discretionary gap with the Zone 2 exhaust stack monitoring, periodic grab samples versus continuous online monitoring, was not recommended to be closed.

References

1. WSRC-SA-6, Rev 25, October 2006, "Final Safety Analysis Report Savannah River Site Defense Waste Processing Facility."
2. WSRC-TR-94-0586, Defense Waste Processing Facility Preliminary Hazard Analysis, Rev 0 December 1994.
3. WSRC-PH-93-17, Vitrification Building HVAC Process Hazards Review (PHR), PHR 200-S-384, Rev 1 (6/7/93).
4. Preparation Guide for U.S. Department of Energy Nonreactor Nuclear Facility Documented Safety Analyses, Change Notice No. 3, DOE-STD-3009-94, U.S. Department of Energy, Washington, DC, March 2006.

5. Conduct of Engineering and Technical Support, WSRC Procedure Manual E7, Procedure 2.25, Functional Classification, Rev. 3 and Rev 14, Westinghouse Savannah River Company, February 1995 and November 2004.
6. Deliverables 8.5.4 and 8.7 of Implementation Plan for DNFSB Recommendation 2004-2, Ventilation System Evaluation Guidance for Safety-Related and Non-Safety-Related Systems, U.S. Department of Energy, Washington, DC, January 2006.
7. WSRC Memorandum LWO-WSE-2007-00013 from S.D. Burke to C.A. Everatt, "DNFSB Recommendation 2004-2 – Defense Waste Processing Facility (DWPF) Zone 1 Exhaust System Table 4.3 Submittal," February 28, 2007.
8. WSRC Memorandum LWO-WSE-2007-00068 from S.D. Burke to C.A. Everatt, "DNFSB Recommendation 2004-2 – Defense Waste Processing Facility (DWPF) Zone 1 Exhaust System Table 5.1 Submittal," April 16, 2007.
9. WSRC Memorandum LWO-WSE-2007-00029 from S.D. Burke to C.A. Everatt, "DNFSB Recommendation 2004-2 – Defense Waste Processing Facility (DWPF) Vitrification Building Zone 2 and 3 Ventilation Systems Table 4.3 Submittal," February 28, 2007.
10. WSRC Memorandum LWO-WSE-2007-00070 from S.D. Burke to C.A. Everatt, "DNFSB Recommendation 2004-2 – Defense Waste Processing Facility (DWPF) Vitrification Building Zone 2 and 3 Ventilation Systems Table 5.1 Submittal," April 16, 2007.
11. G-SYD-S-00041, DWPF System Design Description, Zone 1 Ventilation System, Rev 4, August 31, 2004
12. G-SYD-S-00042, DWPF System Design Description, Zone 2 Ventilation System, Rev 6, May 19, 2005
13. G-SYD-S-00043, DWPF System Design Description, Zone 3 Ventilation System, Rev 1, April 15, 2003
14. WSRC-IM-2002-00014, SRS Air Emissions Monitoring Graded Approach, Rev 4

Attachment 1 – Vitrification Building Ventilation System Description

The design of the Vitrification Building incorporates multiple confinement levels to minimize releases of radioactivity to the environment and to minimize transport of radioactive contaminants within the facility. The primary confinement for the radioactive material at the Defense waste Processing (DWPF) consists of the process vessels and piping, process vent systems, and glass canisters. The DWPF processes take place in the closed vessels located in the Remote Process Cells (RPC). The DWPF chemical process tanks produce gaseous byproducts that contain radioactive material. The process vent facilities collect and treat these byproducts. The vitrification process takes place in the melter and also produces radioactive gaseous byproducts. The melter offgas treatment facilities collect and treat these byproducts. After treatment, all of the process gases are transferred to the Zone 1 Heating Ventilation and Air Conditioning (HVAC) exhaust for further filtration by the sand filter before being released to the stack.

A second level of confinement for the radioactivity in the process cells consists of the canyon structure and the Zone 1 ventilation system. The system is designed to keep these areas at a negative pressure relative to the adjoining corridors in order to ensure that any airflow is into the Zone 1 areas. Within Zone 1, airflow is from areas with relatively low contamination to areas with higher levels of contamination. The Zone 1 HVAC system exhausts through a highly efficient sand filter that removes most of the particulate radioactivity before being released to the stack. Radiological Buffer Area (RBA) corridors surround the portions of the canyon structure that contain openings. These corridors are served by the Zone 2 ventilation system. Although radioactive contamination is not expected in the RBA, it is possible that contamination could be present under abnormal or upset conditions. The RBA and the Zone 2 ventilation system therefore serve to confine any airborne radioactive material that could potentially escape from the Zone 1 areas. The Zone 2 ventilation system exhausts through HEPA filters to reduce the amount of radioactivity released to the environment.

The process areas of the Vitrification Building are divided into three zones for purposes of ventilation and contamination control. Zone 1 contains the areas with the highest potential for contamination and Zone 3 includes the areas with the lowest potential for contamination. Therefore, the air pressure is maintained highly negative for Zone 1 and slightly negative for Zone 3. The areas contained in each zone are as follows:

Zone 1: Zone 1 includes the Chemical Process Cell (CPC), the Salt process Cell (SPC), the Crane Maintenance Area (CMA), the Canister Decontamination Cell (CDC), the Melt Cell (MC), the Remote Equipment Decontamination Cell (REDC), the Remote Process Cell Plenum (RPCP), the Contact Decontamination Maintenance Cell (CDMC), the Railroad Well, the Analytical Cell, and the Sample and Mercury Purification Cells. The Weld Test Cell (WTC) is also characterized as Zone 1; however, it is maintained at slightly positive pressure relative to the remainder of Zone 1.

Zone 2: Zone 2 is subdivided into zones 2 and 2B. Zone 2 includes all normally occupied radiological areas with potential for contamination, such as the operating and service corridors on levels 1 and 3, all Regulated Shops (RSs), Manipulator Repair Shop (MRS), and the Railroad Well Air Lock. These areas are at a higher pressure than Zone 1 areas.

Zone 2B: Zone 2B is the operating space between Zone 2 and Zone 1 areas. This zone includes the analytical lab and sampling cell hoods, the mercury distillation hood and storage cabinet, and two cell entry/exit hoods. The pressure in these areas is less than that in Zone 2.

Zone 3: Zone 3 includes clean offices, Field Operating Stations (FOS) 1 and 2, clean machine shops, clean equipment area, and other clean personnel areas on level 2. These areas are maintained at a positive pressure relative to areas in Zones 1, 2 and 2B. However, Zone 3 pressure is slightly below atmospheric outdoor pressure.

Zone 1 Supply and Exhaust Systems (refer to Figure 3 and 4)

Zone 1 processing cells are designed to be heated/cooled and ventilated with 100% outside air to limit the cell operating temperatures during the summer. Air is distributed to the various cell areas in accordance with ventilation requirements sufficient to remove equipment heat loads and to maintain design air velocities through open cell covers.

Four air supply units, each with two 100% capacity centrifugal-type fans, are provided for Zone 1 areas. The air supply units furnish air to the crane maintenance area, the chemical process cell, the remote equipment decontamination cell, the contact decontamination and maintenance cell, the canister decontamination cell, and the weld test cell. Supply fans are served by normal electrical power.

Air supply to the crane maintenance area and the contact decontamination and maintenance cell is provided by an air supply unit. The air supply flows to the crane maintenance and contact decontamination and maintenance cell and then to the remote process cells. The remote process cells (chemical process cell, melt cell, and remote equipment decontamination cell) air supply is provided by an air supply unit, through the bus bar corridor and then to the air space above the cell covers. The total remote process cells' air supply includes infiltration from the crane maintenance area, the canister decontamination cell, the contact decontamination and maintenance cell, the shield door hoist equipment room, and the railroad well.

The CDC air supply is provided by an air supply unit and fans. Some of the supply is discharged to the smear test area; the remainder is discharged to the canister decontamination area. Air supplied to the smear test station flows to the canister decontamination cell. Some air from the weld test cell flows to the canister decontamination cell through the canister transfer tunnel. A portion of the supply air flows to the melt cell through the canister transfer tunnel; some supply air flows to the remote process cells air space through designed slots in the cell covers.

The WTC is a direct contact maintenance area within the Zone 1 cell block that must be kept as clean as possible. It is, therefore, exhausted separately through the Zone 2 exhaust system. The weld test cell air supply is provided by an air supply unit. The indoor environment is maintained to meet equipment operability requirements.

The supply duct penetrations to the Zone 1 cells are equipped with tornado dampers to prevent migration of contamination if the cells lose negative pressure. Dampers fail in the closed position.

Zone 1 air supply system control is provided with interlocked supply fans that shut down if the negative pressure in the Zone 1 Sand Filter Inlet Plenum rises above a set maximum. Controls are supplied with the capability to start the standby fan when the operating fan develops operational problems that lead to a low flow condition. Instrumentation is provided to measure the pressure inside each of the process cells relative to the atmosphere.

Three normally operating fans and one standby fan are provided to continuously exhaust air from the Zone 1 areas. Fans are located in the Building 292-S fan house. Ventilation air from Zone 1 is drawn through the sand filter and then discharged to the atmosphere via the Zone 1 exhaust stack. The exhaust fans are equipped with variable inlet vanes, a flow measuring device, discharge dampers, and isolation dampers. Controls for the Zone 1 exhaust fans will start the standby fan when operational problems lead to a low flow condition or when the negative pressure in the exhaust rises above a set maximum pressure.

All fans shut down if normal power fails. The two 480 V load centers in the Fan House which serve the Zone 1 exhaust fans are connected to the two standby diesel generators. One out

of four Zone 1 exhaust fans is required to operate to maintain the negative pressure needed. The exhaust fans are automatically switched to diesel power in the event of normal power failure.

An emergency exhaust port is installed on the duct between Building 292-S and the Zone 1 air exhaust stack. The damper can be manually opened if needed.

Air, which flows through the railroad well from the regulated shop air supply unit, is directed to the remote process cell air space. Exhaust from the process vessel vent system and the offgas vent system discharges into the Zone 1 exhaust tunnels for additional filtration at the sand filter.

Both the Zone 1 Exhaust System and supporting Diesel Generator System are functionally classified as Safety Significant.

Zone 2 Supply and Exhaust Systems (refer to figure 5)

RBA corridors in the Vitrification Building levels 1 and 3, the SCT decontamination and maintenance area, the regulated machine and manipulator repair shops, and various shops are supplied with heated/cooled air to maintain an indoor environment consistent with equipment and personnel habitability requirements. Supply air to Zone 2 is provided by the following units. Three air supply units and associated fans recirculate return air from level 2, Zone 3 clean areas, and supply air to levels 1, 3 and mezzanine Zone 2 RBA areas. One air supply unit with two 100% capacity fans, supplies conditioned outside air to the manipulator repair shop, to the regulated shop, to the railroad well, and to the elevator machine room on the Vitrification Building roof. One air handling unit supplies conditioned outside air to the SCT decontamination and maintenance area and to the records room. Supply air is exhausted through the canister load-out area to the Zone 2 exhaust system or directly outside via local exhausters. Zone 2 air supply fans are normally interlocked off if the negative pressure in the Zone 2 exhaust plenum rises above a set pressure. Controls are supplied with the capability to start the standby fan when operational problems lead to a low flow condition. The service corridors, regulated shops, and similarly occupied areas in the Vitrification Building are controlled areas that may become contaminated.

Air exhaust from Zone 2 areas, the weld test cell, and radiologically controlled shops is potentially contaminated with radioactivity. Exhaust air from each area is discharged into a single exhaust stream. This stream is processed through a common HEPA filtration unit to remove radioactive particulates before it is discharged to the atmosphere through a stack located on the Vitrification Building (Building 221-S) roof. Since there is potential for high contamination of the weld test cell, the exhaust from this cell is passed through HEPA filters before it enters the Zone 2 exhaust system for additional HEPA filtration before discharge to the atmosphere. Two 100% capacity HEPA filter trains are provided. They are located within a shielded room on the east mezzanine corridor. Each filter train consists of a stainless steel filter housing and frames, roughing filter bank, HEPA filter bank, a centrifugal exhaust fan, isolation dampers, and connecting duct work. The exhaust fans are equipped with variable inlet vanes, a flow straightener and measuring device, and isolation dampers.

The analytical area consists of facilities on the west mezzanine including the laboratories, counting rooms, and the analytical, sample, and mercury purification cells. Ventilation zones for these facilities are classified as a combination of Zone 1 and Zone 2. The analytical, sample, and mercury purification cells are small Zone 1 areas in which radioactive materials are handled. Air supplied to the cells is cascaded by fans from the corridors, through an inlet prefilter and HEPA filter, to the analytical, sample, and mercury purification cells. Exit air is directed to the Zone 1 exhaust tunnel. Laboratory (Zone 2) air is supplied by direct ducting from air supply units located on the SCT decontamination and maintenance area roof. The

counting room receives air from a Zone 2 air supply system (located on the roof of the loading dock) and discharges to the Zone 2 exhaust system.

Mezzanine lab ventilation consists of 3 branches, each with its own HEPA filter housing. Exhaust air from entry/exit sample hoods serving mezzanine cells is one branch. Exhaust air from analytical hoods, radiobenches, and fume hoods in the analytical laboratory and the hoods in the organic laboratory is another branch. The third branch exhausts gas sampling hoods located on the mezzanine level. Each HEPA filter plenum consists of a stainless steel housing and frame, a prefilter bank, and the HEPA filter bank. Capability for filter replacement during operation is provided. Three exhaust fans are provided to direct mezzanine lab exhaust air to the Zone 2 exhaust system.

The canister smear test hood is located on the first level. This hood is exhausted through a local HEPA filter housing and exhaust fan before the air enters the Zone 2 main exhaust. The local HEPA filter housing consists of a prefilter bank and a HEPA filter bank.

The HVAC systems serving the radiological change areas and RC facilities located in the Service Building are designed to maintain area design temperature conditions during summer and winter operations. The once-through system supplies outdoor air. The air is exhausted to the Vitrification Building Zone 2 exhaust system. The HVAC equipment consists of an air supply unit and two supply fans, one operating and one on standby. Within the RBA areas, the RC laboratory and the instrument decontamination rooms are each provided with an exhaust hood. The air from these two hoods is exhausted to the Building 221-S Zone 2 exhaust system.

The Zone 2 ventilation System is functionally classified as Production Support and its exhaust fans are supplied with backup power.

Zone 3 Supply and Exhaust Systems (refer to figure 5)

The Zone 3 areas inside the Vitrification Building level 2 are cooled and ventilated using 100% outdoor air supplied by three air supply units, each with two 100% capacity fans. The indoor environment is designed to meet equipment and personnel habitability requirements. Humidification is provided by local humidifiers where required. Return air is not recirculated to these areas. Instead, it is cascaded through air supply units and used as Zone 2 supply air. Self-contained, backup air conditioning units are provided for FOS 1 and FOS 2. Cooling water is provided from the cooling tower under normal conditions or the emergency cooling water system in the event of normal power failure.

The electrical equipment room on the Vitrification Building roof is equipped with one ventilation unit. The indoor environment is maintained to meet equipment operability requirements. Conditioned air is supplied to each of the two Battery Rooms by the Zone 3 air supply units. The battery rooms contain batteries for the 125 V DC power system and for uninterruptible power supplies. These batteries generate hydrogen gas during recharging. Sufficient air flow is provided to maintain a minimum air change rate to maintain the concentration of hydrogen in the battery rooms below the lower explosive limit. The field operating station room on the Vitrification Building roof is equipped with a self contained air conditioning unit and two standby air conditioning units on standby power. The indoor environment is maintained to meet equipment operability requirements.

As mentioned in the Zone 2 discussion, the three Zone 2 air supply units and associated fans recirculate return air from level 2, Zone 3 clean areas, and supply air to levels 1, 3 and mezzanine Zone 2 RBA areas. Thus the exhaust fans for the Zone 3 in the Vitrification Building are the Zone 2 supply fans.

The Zone 3 ventilation system is functionally classified as Production Support and is not supplied with backup power.

Figure 3. Zone 1 Ventilation System

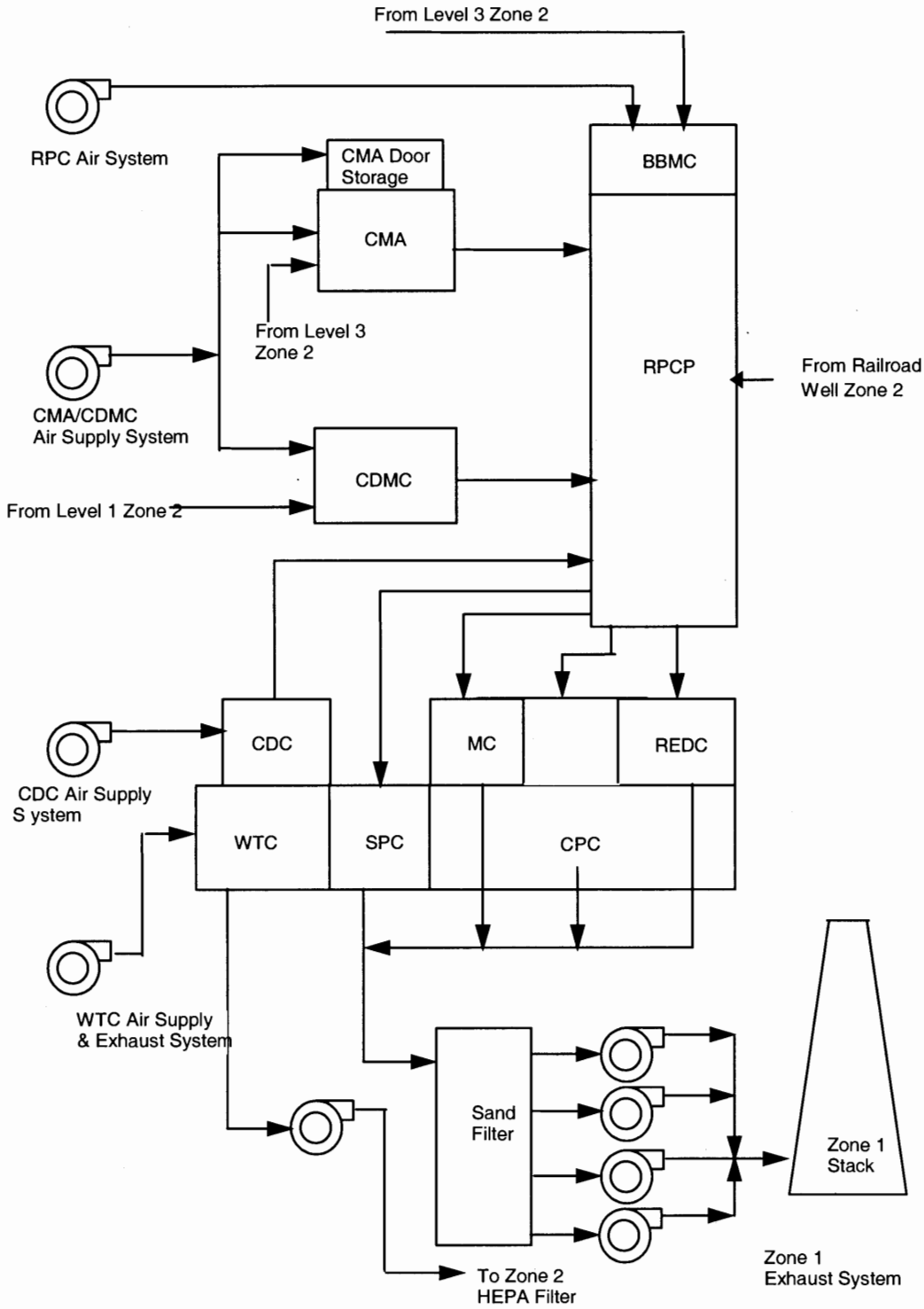

Figure 4. Safety Significant Zone 1 Exhaust System

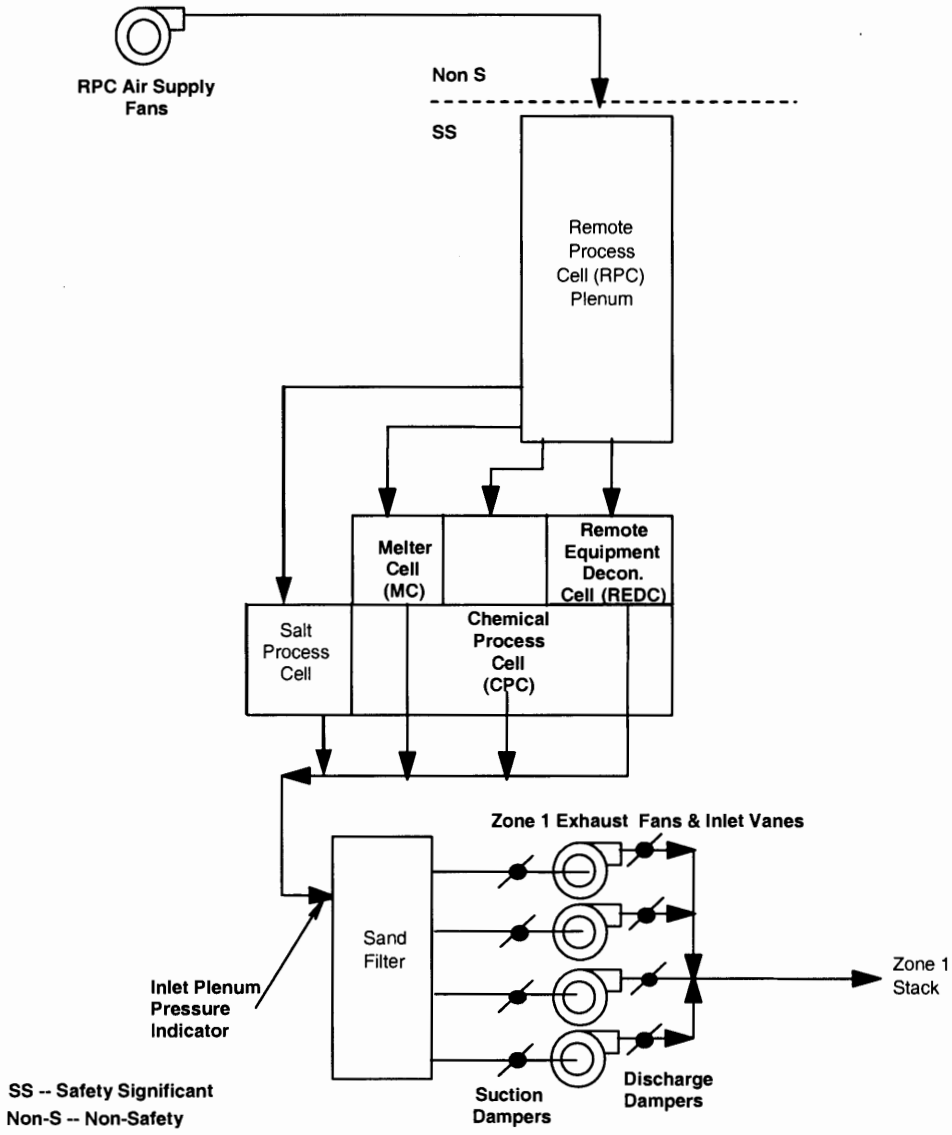

Figure 5. Zone 2 and 3 Ventilation Systems

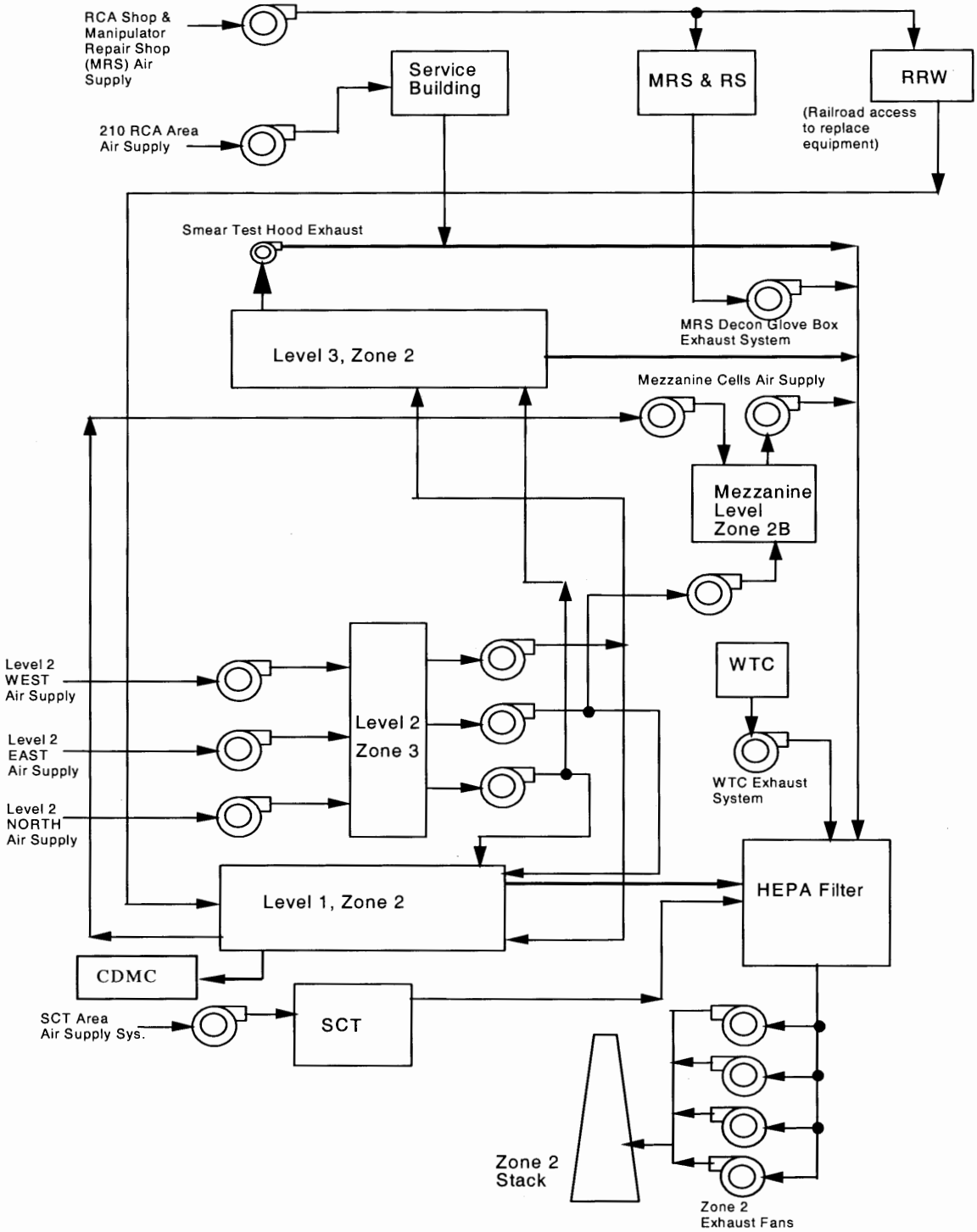

Attachment 2 – 2004-2 Table 4.3
Zone 1 Exhaust Ventilation System

Attachment 2 – 2004-2 Table 4.3 Zone 1 Exhaust Ventilation System

Confinement Documented Safety Analysis Information										
DWPF – Zone I Exhaust Ventilation				Hazard Category 2				Performance Expectations		
Bounding Accidents[3]	Type Confinement		Doses Bounding unmitigated / mitigated[1, 2]	Confinement Classification			Safety Function	Functional Requirements	Performance Criteria	Compensatory Measures
	Active	Passive		SC	SS	DID				
Vitrification Building Propagated Vessels (i.e., SEFT, SME, SRAT, MFT, SMECT, PRFT, BUOGCT/ OGCT) Explosion/Fire (See Note #4A)	X		Unmitigated MOI = 8.68 rem CW = 3170 rem Mitigated MOI = 8.68 rem CW = 0 rem		X		Confinement for public, collocated and in-facility worker protection	Provide filtered ventilation pathway to mitigate radioactive releases during normal operations and explosion/fire. Required to be operational anytime there is radioactive or explosive material in the canyon.	Remain functional during normal operations and explosion/fire conditions with a minimum Decontamination Factor (DF) of 200.	None

Attachment 2 – 2004-2 Table 4.3 Zone 1 Exhaust Ventilation System

Confinement Documented Safety Analysis Information										
DWPF – Zone I Exhaust Ventilation				Hazard Category 2				Performance Expectations		
Bounding Accidents[3]	Type Confinement		Doses Bounding unmitigated / mitigated[1, 2]	Confinement Classification			Safety Function	Functional Requirements	Performance Criteria	Compensatory Measures
	Active	Passive		SC	SS	DID				
Vitrification Building Single Vessel Explosion/Fire (See Note #4B)	X		Unmitigated MOI = 1.76 rem CW = 589 rem Mitigated MOI = 1.76 rem CW = 0 rem		X		Confinement for collocated and in-facility worker protection	Provide filtered ventilation pathway to mitigate radioactive releases during normal operations and explosion/fire. Required to be operational anytime there is radioactive or explosive material in the canyon.	Remain functional during normal operations and explosion/fire conditions with a minimum Decontamination Factor (DF) of 200.	None

Attachment 2 – 2004-2 Table 4.3 Zone 1 Exhaust Ventilation System

Confinement Documented Safety Analysis Information										
DWPF – Zone I Exhaust Ventilation				Hazard Category 2				Performance Expectations		
Bounding Accidents[3]	Type Confinement		Doses Bounding unmitigated / mitigated[1, 2]	Confinement Classification			Safety Function	Functional Requirements	Performance Criteria	Compensatory Measures
	Active	Passive		SC	SS	DID				
Vitrification Building bounding spill/leak SRAT material (See Note # 5)	X		Unmitigated MOI = 0.1 rem CW = 26.5 rem Mitigated MOI = 0.1 rem CW = 0.133 rem		X		Confinement for and in-facility and collocated worker protection	Provide filtered ventilation pathway to mitigate radioactive releases during normal operations. Required to be operational anytime there is radioactive or explosive material in the canyon.	Remain functional during normal operations and leak/spill conditions with a minimum Decontamination Factor (DF) of 200.	None

Attachment 2 – 2004-2 Table 4.3 Zone 1 Exhaust Ventilation System

Confinement Documented Safety Analysis Information										
DWPF – Zone I Exhaust Ventilation				Hazard Category 2				Performance Expectations		
Bounding Accidents[3]	Type Confinement		Doses Bounding unmitigated / mitigated[1, 2]	Confinement Classification			Safety Function	Functional Requirements	Performance Criteria	Compensatory Measures
	Active	Passive		SC	SS	DID				
Uncontrolled reaction in SRAT leads to over pressurization (See Note # 6)	X		Unmitigated MOI < 0.1 rem CW = 9.79 rem Mitigated MOI < 0.1 rem CW = 0.049 rem		X		Confinement for collocated and in-facility worker protection	Provide filtered ventilation pathway to mitigate radioactive releases during normal operations and over pressurization. Required to be operational anytime there is radioactive or explosive material in the canyon.	Remain functional during normal operations and over pressurization conditions with a minimum Decontamination Factor (DF) of 200.	None

Attachment 2 – 2004-2 Table 4.3 Zone 1 Exhaust Ventilation System

Confinement Documented Safety Analysis Information										
DWPF – Zone I Exhaust Ventilation				Hazard Category 2				Performance Expectations		
Bounding Accidents[3]	Type Confinement		Doses Bounding unmitigated / mitigated[1, 2]	Confinement Classification			Safety Function	Functional Requirements	Performance Criteria	Compensatory Measures
	Active	Passive		SC	SS	DID				
Seismic (Spill, Explosion & Fire) impacts Vitrification Building (See Note # 7)	X		Unmitigated[8] MOI = 9.75 rem CW = 3535 rem Mitigated[8] MOI = 0.81 rem CW = 2.63 rem		X		Confinement for public, collocated and in-facility worker protection	Provide filtered ventilation pathway to mitigate radioactive releases during normal operations and seismic (Performance Category (PC) -2). The Diesel Generator System supports the Zone 1 Ventilation System during a loss of power (PC-2). Required to be operational anytime there is radioactive or explosive material in the canyon.	Remain functional during normal operations and seismic with a minimum Decontamination Factor (DF) of 200.	None

Attachment 2 – 2004-2 Table 4.3 Zone 1 Exhaust Ventilation System

Confinement Documented Safety Analysis Information										
DWPF – Zone I Exhaust Ventilation				Hazard Category 2				Performance Expectations		
Bounding Accidents[3]	Type Confinement		Doses Bounding unmitigated / mitigated[1, 2]	Confinement Classification			Safety Function	Functional Requirements	Performance Criteria	Compensatory Measures
	Active	Passive		SC	SS	DID				
Tornado/high winds impact Vitrification Building (See Note # 9)	X		Unmitigated[10] MOI = 9.75 rem CW = 3535 rem Mitigated[10] MOI = 0.0 rem CW = 0.0 rem		X		Confinement for public, collocated and in-facility worker protection	Provide filtered ventilation pathway to mitigate radioactive releases during normal operations and high winds (PC-2). The Diesel Generator System supports the Zone 1 Ventilation System during a loss of power (PC-2) Required to be operational anytime there is radioactive or explosive material in the canyon.	Remain functional during normal operations and tornado/high winds with a minimum Decontamination Factor (DF) of 200.	None

Attachment 2 – 2004-2 Table 4.3 Zone 1 Exhaust Ventilation System

Notes:

1. MOI – Maximally Exposed Offsite Individual; CW – Collocated Worker (100 meters).

2. A Leak Path Factor (LPF) of 1.0 was used in the unmitigated analyses. All MOI consequence dose values were taken from the DSA. The CW doses were taken from the following accident analyses calculations: S-CLC-S-00101, Vessel and Pool Fire Hydrogen/Isopar L Explosion Accident Analysis for ARP, MCU and DWPF Sludge Only Operations Rev1, S-CLC-S-00102, ARP/DWPF with MCU-SE Coupled Operations Leaks and Spills Rev 1, S-CLC-S-00106, DWPF Sludge, ARP, MCU SE Natural Phenomena: Earthquake and Tornado Rev 2, S-CLC-S-00107, Master Calculation Note for Defense Waste Processing Safety Analysis Rev 1.

3. Acronym Definitions: PRFT (Precipitate Reactor Feed Tank); SEFT (Strip Effluent Feed Tank); SME (Slurry Mix Evaporator); SRAT (Sludge Receipt and Adjustment Tank); MFT (Melter Feed Tank); SMECT (Slurry Mix Evaporator Condensate Tank), OGCT (Offgas Condensate Tank), and BUOGCT (Backup Offgas Condensate Tank).

4A. Propagated Vessel Explosions/Fire: There are no SC controls required for this event since the event propagation is not credible. However, the event would be prevented by the same SC and SS controls selected and required for the seismic event. These same controls are identified in the DSA as defense in depth controls for the non-seismic initiated event. These defense in depth controls include the Zone 1 Ventilation System.

The Safety Class Chemical Process Cell (CPC) safety grade nitrogen and safety significant primary purge systems prevent flammable mixtures from forming in the SEFT and PRFT. The safety class temperature monitor and interlocks isolate heat sources in the SEFT and PRFT (i.e., agitator, sample pump and transfer pump) and prevent an increase in temperature that raises the organic vapor pressure above the flammable concentration in the bulk vapor space or organic vapor layer.

The safety class CPC Safety Grade Nitrogen and safety significant Primary Purge Systems prevent flammable mixtures from forming in the SRAT, SME, MFT, and SMECT. TSR controls assure that in the operation mode in the SME and SRAT the primary purge provides the required purge flows and that the low purge flow interlocks are operable. The low purge flow interlocks close the steam and chemical valves to the SRAT and SME and stop the Process Frit Slurry Transfer Pump to the SME. TSR controls on nitric and formic acid additions (TSR 5.8.2.23) prevent over addition of chemicals. Hydrogen generation verification testing for each sludge macro batch (TSR 5.8.2.11) assures that the hydrogen generation rate is not above that assumed for the purge flow to the vessel. TSR 5.8.2.11 will also assure that

Attachment 2 – 2004-2 Table 4.3 Zone 1 Exhaust Ventilation System

the organic concentration is within the limits assumed for the purge flow rate. TSR controls assure that when the SEFT or PRFT is feeding the SRAT, the required SC steam flow and low temperature interlocks in the SRAT are operable (Interlocks stop the SEFT and PFRT transfer pumps on low SRAT temperature or steam flow.). The controlled feed flow rate (via flow control orifices in the transfer lines from the SEFT or PRFT) and agitation control in the SEFT and PRFT prevent the accumulation of organics in the SRAT and in the SRAT condenser train.. The steam piping and jumper downstream of the steam flow elements are SC to maintain structural integrity to ensure steam is supplied to the SRAT. A Limiting Condition of Operation (LCO 3.1.11) control assures that in the operation mode, that the check valves ensure the required steam flow is delivered to the SRAT. TSR control on maximum Total Organic Carbon (TOC) for melter feed (LCO 3.1.8) prevents excessive combustible offgas compounds in the OGCT. TSR (LCO 3.3.1) required interlocks stop the melter feed pumps to reduce combustibles in the OGCT if conditions occur that reduce the combustion rate (i.e., low Backup Offgas Film Cooler (BUOGFC) (combustion) air flow, low melter vapor space temperature, low total melter air flow, low steam pressure to the Offgas Film Cooler (OGFC) & BUOGFC, and excess feed rate to the melter. In addition, when the melter is in the OPERATING MODE, it is aligned to the primary off-gas system due to TSR LCO 3.3.1, which prevents flammable conditions in the BUOGCT. The SS Zone 1 ventilation system mitigates the consequences of the event and has TSR controls to assure operability. The remote process cells support the Zone 1 ventilation system and provide shielding. Gas Chromatographs and interlocks to isolate cold feed and steam are safety significant and prevent explosions in the SRAT offgas.

The Onsite mitigated dose for this event is zero as vessel explosions/fires are prevented.

See 9.4.2.3, 9.4.2.4, 9.4.2.5, 9.4.2.6, 9.4.2.23, 9.4.2.25, and 9.4.2.26 of WSRC-SA-6, Rev. 25 Final Safety Analysis Report Savannah River Site Defense Waste Processing Facility for additional details.

4B. Single Vessel Explosion/Fire: The bounding consequences are based on the SRAT explosion/fire. A SMECT explosion/fire has the same consequences as the SRAT as a conservative assumption is made that the entire contents of the SRAT are carried over to the SMECT. There are no SC controls required for this event since the unmitigated consequences do not challenge the offsite Evaluation Guidelines based on E7 2.25 Functional Classification, Rev 3. The Onsite consequences exceed the evaluation guideline and require the following Safety Significant controls:

The Safety Class Chemical Process Cell (CPC) safety grade nitrogen and safety significant primary purge systems prevent flammable mixtures from forming in the SEFT and PRFT. The safety class temperature monitor and interlocks isolate heat sources in the SEFT and PRFT (i.e., agitator, sample pump and transfer pump) and prevent an increase in temperature that raises the organic vapor pressure above the flammable concentration in the bulk vapor space or organic vapor layer.

Attachment 2 – 2004-2 Table 4.3 Zone 1 Exhaust Ventilation System

The safety class CPC Safety Grade Nitrogen and safety significant Primary Purge Systems prevent flammable mixtures from forming in the SRAT, SME, MFT, and SMECT. TSR controls assure that in the operation mode in the SME and SRAT the primary purge provides the required purge flows and that the low purge flow interlocks are operable. The low purge flow interlocks close the steam and chemical valves to the SRAT and SME and stop the Process Frit Slurry Transfer Pump to the SME. TSR controls on nitric and formic acid additions (TSR 5.8.2.23) prevent over addition of chemicals. Hydrogen generation verification testing for each sludge macro batch (TSR 5.8.2.11) assures that the hydrogen generation rate is not above that assumed for the purge flow to the vessel. TSR 5.8.2.11 will also assure that the organic concentration is within the limits assumed for the purge flow rate. TSR controls assure that when the SEFT or PRFT is feeding the SRAT, the required SC steam flow and low temperature interlocks in the SRAT are operable (Interlocks stop the SEFT and PFRT transfer pumps on low SRAT temperature or steam flow.). The controlled feed flow rate (via flow control orifices in the transfer lines from the SEFT or PRFT) and agitation control in the SEFT and PRFT prevent the accumulation of organics in the SRAT and in the SRAT condenser train. The steam piping and jumper downstream of the steam flow elements are SC to maintain structural integrity to ensure steam is supplied to the SRAT. A Limiting Condition of Operation (LCO 3.1.11) control assures that in the operation mode, that the check valves ensure the required steam flow is delivered to the SRAT. TSR control on maximum TOC for melter feed (LCO 3.1.8) prevents excessive combustible offgas compounds in the OGCT. TSR (LCO 3.3.1) required interlocks stop the melter feed pumps to reduce combustibles in the OGCT if conditions occur that reduce the combustion rate (i.e., low Backup Offgas Film Cooler (BUOGFC) (combustion) air flow, low melter vapor space temperature, low total melter air flow, low steam pressure to the Offgas Film Cooler (OGFC) & BUOGFC, and excess feed rate to the melter. In addition, when the melter is in the OPERATING MODE, it is aligned to the primary off-gas system due to TSR LCO 3.3.1, which prevents flammable conditions in the Backup Offgas Condensate Tank (BUOGCT). The SS Zone 1 ventilation system mitigates the consequences of the event and has TSR controls to assure operability. The remote process cells support the Zone 1 ventilation system and provide shielding. Gas Chromatographs and interlocks to isolate cold feed and steam are safety significant and prevent explosions in the SRAT offgas.

The Onsite mitigated dose for this event is zero as vessel explosions/fires are prevented.

See 9.4.2.3, 9.4.2.4, 9.4.2.5, 9.4.2.6, 9.4.2.23, 9.4.2.25, and 9.4.2.26 of WSRC-SA-6, Rev. 25 Final Safety Analysis Report Savannah River Site Defense Waste Processing Facility for additional details.

5. Overflows/Spills/Leaks: The bounding unmitigated scenario in the CPC or Salt Process Cell (SPC) is assumed to progress as follows. An overflow occurs in a CPC vessel causing a free fall spill of up to 12,000 gallons of concentrated sludge into the CPC at a rate of 250 gpm. Subsequent entrainment/resuspension releases continue for 96 hours, after which the accident is assumed to terminate.

Attachment 2 – 2004-2 Table 4.3 Zone 1 Exhaust Ventilation System

The consequence for the SRAT material transfer overflow bounds a SEFT transfer overflow. The dose reported in S-CLC-S-00102 for the SEFT spill within the CPC was calculated at 250 gpm transfer rate. S-CLC-S-00070, Input Deck for Use in DWPF Safety Analyses, Rev 7, notes that SEFT transfer pump maximum flow is 70 gpm. There is also a restricting orifice in the line which is designed to limit transfers to no greater than 10 gpm. The slower transfer rate results in the SEFT material overflow consequences being less than a SRAT material overflow. Regardless, the control for either overflow would be the same.

There are no SC controls required for this event since the unmitigated offsite consequences do not challenge the offsite evaluation guidelines. The SS Zone 1 ventilation system mitigates releases from spills in the vitrification building.

The mitigated Offsite dose given in Table 4.3 for the Vitrification Building spill is same as the unmitigated, as SC controls are not required. The Final Safety Analysis Report does not give the Onsite doses. The Onsite mitigated dose is the Onsite unmitigated dose reduced by the decontamination factor of 200.

See 9.4.2.13 of WSRC-SA-6, Rev. 25 Final Safety Analysis Report Savannah River Site Defense Waste Processing Facility for additional details.

6. Uncontrolled Reactions: An uncontrolled reaction occurs in the SRAT, aerosolizing and spilling inventory into the CPC. The event is assumed to generate the maximum aerosol concentration that can be made airborne within the entire CPC volume following an uncontrolled reaction.

   There are no SC controls required for this event since the unmitigated offsite consequences do not challenge the offsite evaluation guidelines. The SS Zone 1 ventilation system mitigates releases from uncontrolled reactions in the vitrification building.

   The mitigated Offsite dose given in Table 4.3 for the Vitrification Building, uncontrolled reaction, is same as the unmitigated, as SC controls are not required. The Final Safety Analysis Report does not give Onsite doses. The Onsite mitigated dose would be the Onsite unmitigated dose reduced by the decontamination factor of 200.

   See Section 9.4.2.16, Uncontrolled Reactions in Process Cells, of WSRC-SA-6, Rev. 25 Final Safety Analysis Report Savannah River Site Defense Waste Processing Facility for additional details.

Attachment 2 – 2004-2 Table 4.3 Zone 1 Exhaust Ventilation System

7. Seismic Event: An earthquake results in the loss of the purge systems for the CPC and SPC. The CPC and SPC vessels detonate, overpressurizing the cell and dislodging the cell covers. The cell covers then fall back into the CPC or other cells, which cause severe damage to the vitrification building. Falling debris or structural failure crushes the glass canisters in the vitrification building. The loss of purge or the falling debris causes the process vessels in the CPC and SPC to detonate (except for the RCT, which is splashed). The SMECT is assumed to contain radioactive material due to SRAT carryover. The SEFT and PRFT are assumed to contain a mixture of Strip Effluent and MST/Sludge Solids due to leakage by the three-way valve. Since organic solvent can be present in the SEFT, PRFT, SRAT and SMECT, the detonation ignites a floating layer of organic that can form on the surface of the liquid leading to a subsequent pool fire in these vessels. The earthquake also results in the loss of combustion or dilution air to the melter plenum or offgas allowing excess combustibles to pass to the OGCT causing an explosion in the OGCT. In the melt cell, a sufficient layer of salt is assumed to be present in the melter. During a seismic event, water (from failure of the cooling water jacket, seal pot, flush water, etc.) sprays onto the molten salt layer causing a steam explosion in the melter, which breaches the melter offgas system, allowing the heated molten glass in the melter to vent to the cell. According to E7 2.25 Functional Classification, Rev 3, safety class controls are required.

   In the mitigated scenario, with safety class SSCs and TSR controls, the progression is as follows: In the melt cell, the seismic event causes the failure of the melter offgas containment allowing the heated molten glass in the melter to vent to the cell. The melter continues to operate and release untreated offgas for 4 days without mitigation. The glass canisters in the vitrification building are crushed releasing respirable fines of glass. The RCT spills it contents.

   The Zone ventilation system performs a safety significant defense in depth function to mitigate a release of radioactive materials.

   See 9.4.2.20 of WSRC-SA-6, Rev. 25 Final Safety Analysis Report Savannah River Site Defense Waste Processing Facility for additional details and the Safety Class Controls.

Attachment 2 – 2004-2 Table 4.3 Zone 1 Exhaust Ventilation System

8.

Seismic Event, Consequence Breakdown	Consequences	
	MOI (rem)	CW (rem)
Unmitigated		
Vessel Explosion/Fire (SEFT, SRAT, SMECT, PRFT)	4.38	1479
Vessel Explosion (SME, MFT, OGCT, Melter)	4.55	1530
Melter Offgas	0.8	505
Vessel Spill (RCT)	0.0008	17.1
Canisters Crushed	0.012	3.95
Total	9.75	3535
Mitigated (w/Safety Class Controls and Safety Significant Controls)		
Melter Offgas	0.8	2.525
Vessel Spill (RCT)	0.0008	0.0855
Canisters Crushed	0.012	0.0198
Total	0.81	2.63

The mitigated dose given in Table 4.3 represents the Offsite mitigated dose for the Vitrification Building. The Final Safety Analysis Report does not give the Onsite doses. The Onsite mitigated dose was determined by taking the applicable unmitigated dose values by the decontamination factor of 200.

9. Tornado/High Winds: High winds result in loss of purge to the CPC and SPC. This causes the process vessels to detonate in the CPC and SPC (except for the RCT, which is splashed), overpressurizing the cell and dislodging the cell covers. The cell covers then fall back into the CPC or other cells, which causes severe damage to the vitrification building. Falling debris or structural failure crushes the glass canisters within the vitrification building. The SMECT is assumed to contain radioactive material due to SRAT carryover. The SEFT and PRFT are assumed to contain a mixture of Strip Effluent and MST/Sludge Solids due to leakage by the three-way valve. Since organic

Attachment 2 – 2004-2 Table 4.3 Zone 1 Exhaust Ventilation System

solvent can be present in the SEFT, PRFT, SRAT and SMECT, the detonation ignites a floating layer of organic that can form on the surface of the liquid leading to a subsequent pool fire in these vessels. The tornado also results in the loss of combustion or dilution air to the melter plenum or offgas allowing excess combustibles to pass to the OGCT causing an explosion in the OGCT. In the melt cell, a sufficient layer of salt is assumed to be present in the melter. During a tornado event, missile impact to the vitrification building causes water (from failure of the cooling water jacket, seal pot, flush water, etc.) to spray onto the molten salt layer causing a steam explosion in the melter, which breaches the melter offgas system, allowing the heated molten glass in the melter to vent to the cell. According to E7 2.25 Functional Classification, Rev 3, Evaluation Guidelines were challenged and safety class controls were chosen.

The SC, DBT qualified, SSCs do not fail during the tornado. The CPC Safety Grade Purge System performs it safety function. The Administrative Control TSR to stop MFT feed pump #2 prevents the explosion of the melter offgas condensate tank. The Administrative Control TSR to limit the salt concentration in the melter feed prevents a melter steam explosion during a tornado event. The SC vitrification building walls protect the melter offgas containment from external missiles preventing an offgas release, and the glass canisters and RCT located within the building.

The Zone1 ventilation system performs a safety significant defense in depth function to mitigate a release of radioactive materials.

See 9.4.2.21 of WSRC-SA-6, Rev. 25 Final Safety Analysis Report Savannah River Site Defense Waste Processing Facility for additional details.

Attachment 2 – 2004-2 Table 4.3 Zone 1 Exhaust Ventilation System

10.

Tornado/High Wind Event, Consequence Breakdown	Consequences	
	MOI (rem)	CW (rem)
Unmitigated		
Vessel Explosion/Fire (SEFT, SRAT, SMECT, PRFT)	4.38	1479
Vessel Explosion (SME, MFT, OGCT, Melter)	4.55	1530
Melter Offgas	0.8	505
Vessel Spill (RCT)	0.008	17.1
Canisters Crushed	0.012	3.95
Total	9.75	3535
Mitigated		
Total	0	0

The Offsite and Onsite mitigated consequences are zero because the SC controls prevent a release of material stored in the Vitrification Building.

Attachment 3 – 2004-2 Table 4.3

Zone 2 and Zone 3 Ventilation Systems

Attachment 3 – 2004-2 Table 4.3 Zone 2 and Zone 3 Exhaust Ventilation System

Confinement Documented Safety Analysis Information										
DWPF – Zone 2 and Zone 3 Ventilation Systems, Building 221-S				Hazard Category 2				Performance Expectations		
Bounding Accidents	Type Confinement		Doses	Confinement Classification			Safety Function	Functional Requirements	Performance Criteria	Compensatory Measures
	Active	Passive	Bounding unmitigated / mitigated	SC	SS	DID				
There are no credible events that require accident analysis per the Evaluation Guide (DOE STD-3009-94), for Zone 2 and 3 Areas *	Zone 2 and Zone 3 Ventilation systems are not credited in the FSAR for confinement.	Although not credited in the FSAR for confinement, Zone 2 ventilation helps contain and mitigate the airborne releases.	There are no credible FSAR bounding accidents where Zone 2 and Zone 3 ventilation is relied upon to mitigate consequences	N/A	N/A	N/A	There are no credited FSAR Zone 2 and Zone 3 ventilation safety functions required	There are no FSAR ventilation functional requirements for Zone 2 and Zone 3 ventilation systems	There are no FSAR ventilation performance criteria for Zone 2 and Zone 3 ventilation systems	There are no FSAR required compensatory measures for the for Zone 2 and Zone 3 ventilation systems

* The movement of the Shielded Canister Transporter (SCT) while the canister is being loaded/unloaded in the Canister Load Out Area is assumed to shear and breach one DWPF glass waste canister. The shearing of one glass canister does not produce source terms resulting in concentrations that challenge the evaluation guidelines. The shearing/breaching of a canister has a potential for a direct radiation exposure to the facility worker. Administrative Control TSR 5.8.2.1 (Radiation Protection Program) requires monitoring during SCT loading/unloading to ensure canister is shielded.

Attachment 3 – 2004-2 Table 4.3 Zone 2 and Zone 3 Exhaust Ventilation System

The Process Hazards Review (PHR), Reference 1, and Preliminary Hazards Analysis (PHA) Reference 2, did not identify any events that challenged the 25 rem public Evaluation Guideline from DOE-STD-3009-94 or the100 rem Co-Located Worker Criteria from the Savannah River Site (SRS) procedure E7 2.25, Functional Classification, for the Defense Waste Processing Facility (DWPF) Vitrification Building, 221-S, Zone 2 and Zone 3 Ventilation Systems.

The PHR and PHA events include operational/mechanical failures; fire, explosions, air reversal, tornados, high wind and seismic events resulting in the release of radiological material and/or chemicals. The worst case events with respect to receptor radiological doses were seismic and high winds. The Zone 2 and Zone 3 Ventilation Systems are not safety related due to the low consequences to both onsite and off-site receptors from postulated events.

One event was identified that challenged the ERPG-2 criteria. This event involves a formic acid storage tank rupture, which creates a vapor cloud that is sucked into the 221-S ventilation intake. This event is not applicable for this evaluation (DNFSB 2004-2) of the Zone 2 and Zone 3 Ventilation System since they do not provide a confinement function for the chemical release from outside of the 221-S Building.

The following table provides the Zone 2 and Zone 3 bounding event. This event bounds the events from the PHR (Ref. 1) and the PHA (Ref.2).

Table 1. Zone 2 and 3 Bounding Events

		Unmitigated Consequences	
Event Category	Confinement Ventilation	Offsite	Onsite
Earthquake/Tornado [1]	Zone 2 VS	Offsite < 0.1 rem	Onsite < 1 rem

[1] No more than 8 canisters can be in the WTC and WTC Canister Exit tunnel at one time. During NPH events, these canisters could be breached. Based on the results from S-CLC-00106, DWPF Sludge, ARP, and MCU SE Natural Phenomena: Earthquake and Tornado, Revision 1, 8 canisters would have offsite consequences of 0.0025 rem and onsite of 0.85 rem at 100 meters. Due to the low consequences, no controls are required for 8 breached canisters. No cumulative dose is calculated for areas exhausted by Zone 2 Ventilation.

Reference:

1. WSRC-PH-93-17, Rev. 1, Vitrification Building HVAC Process Hazards Review (PHR) PHR 200-S-382 (U), Westinghouse Savannah River Company, Aiken, South Carolina.
2. WSRC-TR-94-0586, Rev. 0, Defense Waste Processing Facility Preliminary Hazards Analysis (U), Westinghouse Savannah River Company, Aiken, South Carolina

Attachment 4 – 2004-2 Table 5.1
Zone 1 Ventilation System

Attachment 4

2004-2 Table 5.1 Ventilation System Performance Evaluation – DWPF, Zone I Exhaust Ventilation System

Evaluation Criteria	Discussion	Reference
	1 - Ventilation System – General Criteria	
Pressure differential should be maintained between zones and atmosphere.	As described in Attachment 2, Ventilation System Description, the Zone 1 areas are kept at a lower pressure than the adjoining corridors (Zones 2 & 3). The system is designed to maintain the direction of airflow from Zone 2 into Zone 1. Remote and local instrumentation is used to monitor pressure differentials between zones and to atmosphere. Automatic pressure and flow controls for the four Zone 1 exhaust fans are provided. Under normal operations, three fans are running and one is in standby. With the Zone 1 supply fans off, one exhaust fan is sufficient to maintain negative pressure relative to atmosphere in Zone 1. Loss of Zone 2 supply fans while Zone 2 exhaust fans are running can result in infiltration of Zone 1 air to Zone 2 through inleakage points (e.g., airlocks). Zone 1 / Zone 2 differential pressure interlocks in the DCS are designed to prevent this. . The sand filter inlet plenum pressure is monitored by redundant pressure indicating loops. This signal is used for control of the exhaust fan flows and also feeds redundant SS interlocks that will shut down the Zone 1 supply fans based on a high-high inlet plenum pressure. Inlet plenum pressure is used to verify that the Zone 1 exhaust fans are operating at sufficient capacity to ensure that Zone 1 is at a negative pressure and airflow through the sand filter is maintained. <u>References</u> G-SYD-S-00041, Rev 4, DWPF System Design Description Zone 1 Ventilation WSRC-SA-6, Rev 25, S-Area DWPF Final Safety Analysis Report, sections 4.4.46, 5.4.1 <u>Gap Analysis</u> None, Safety Significant interlocks ensure that Zone 1 is at a negative pressure and airflow through the sand filter is maintained.	DOE-HNBK-1169 (2.2.9) ASHRAE Design Guide

Attachment 4

2004-2 Table 5.1 Ventilation System Performance Evaluation – DWPF, Zone I Exhaust Ventilation System

Evaluation Criteria	Discussion	Reference
Materials of construction should be appropriate for normal, abnormal and accident conditions.	The Zone 1 exhaust tunnels and sand filter are category I structures made of reinforced concrete. The exhaust stack is carbon steel with an epoxy coating inside and out to prevent corrosion. The stack is qualified for tornado wind and seismic loads. The Zone 1 exhaust fans are located inside of a seismically qualified fan house. The fans have not shown any signs of significant material degradation after >17 years of operation. **References** G-SYD-S-00041 WSRC-SA-6 sections 4.4.46, 5.4.1 T-DS-S-00067 T-DS-S-00154 **Gap Analysis** None, materials of construction are appropriate for normal, abnormal and accident conditions	DOE-HNBK-1169 (2.2.5) ASME AG-1

Attachment 4

2004-2 Table 5.1 Ventilation System Performance Evaluation – DWPF, Zone I Exhaust Ventilation System

Evaluation Criteria	Discussion	Reference
Exhaust system should withstand anticipated normal, abnormal and accident system conditions and maintain confinement integrity.	The Zone 1 exhaust system is classified as Safety Significant (SS) and all mechanical components and interlocks required to satisfy credited safety functions are qualified for normal, abnormal, and accident conditions. This evaluation is documented in chapter 4 of the DSA and the referenced supporting calculations. Electrical power is provided by qualified SS load centers with automatic backup power provided by SS diesel generators. Under normal operating conditions, control of the exhaust fans is performed remotely through the Distributed Control System (DCS). The DCS is functionally classified PS and is not qualified for NPH events. Although unintended shutdowns due to DCS failures are possible, this has never occurred in over 4 years of operation with the current DCS system. The exhaust fans are powered from electrically operated breakers at SS load centers B9 and B10. This type of breaker requires a stop signal to open. A loss of DCS signal will not change the breaker position. A DCS failure resulting in the loss of digital output signals is detected at LCS-272. LCS 272 has a design feature to automatically switch to local control if this occurs. LCS-272 also performs a credited safety function of automatically restarting at least one exhaust fan after a loss and restoration of power. Operators can also start and stop exhaust fans at LCS-272. In addition, SS manual start switches are provided at load centers B9 and B10. These switches allow the operators to manually start each of the zone 1 exhaust fans in the event of control system failures. This is a credited safety feature that is regularly tested per a TSR surveillance requirement. <u>References</u> G-SYD-S-00041 WSRC-SA-6 sections 4.4.46, 5.4.1 <u>Gap analysis</u> None. Under normal operations, the Zone 1 exhaust fans are controlled by a PS control system (DCS). However, the DCS has been very reliable and there are multiple credited back up design features available, some requiring operator actions, to ensure that the fans remain in service.	DOE-HNBK-1169 (2.4) ASHRAE Design Guide

Attachment 4

2004-2 Table 5.1 Ventilation System Performance Evaluation – DWPF, Zone I Exhaust Ventilation System

Evaluation Criteria	Discussion	Reference
Confinement ventilation systems shall have appropriate filtration to minimize release.	The sand filter is credited with a minimum efficiency of 99.5%. It is seismically qualified and meets SS requirements as documented in the DSA. TSRs ensure the operability of the sand filter. Per Engineering Standard 15889: "Sand Filters are also the preferred alternate for operational and maintenance factors such as large dust-holding capacity, low maintenance, inertness to chemical attack, high heat capacity, fire resistance, totally passive, and capability to withstand shock loading and large changes in air stream pressure without becoming inoperative." The Sand Filter design capacity is 115,000 cfm. Normal flow is 105,000 cfm. <u>References</u> Eng Std 15889 WSRC-SA-6 sections 4.4.46, 5.4.1 WSRC-TS-95-0019, DWPF's Technical Safety Requirements, Rev 32, Section B3.7.1 <u>Gap analysis</u> None, Safety Significant Zone 1 Sand Filter provides appropriate filtration to minimize release.	ASME AG-1 DOE-HNBK-1169 (2.2.1)

Attachment 4

2004-2 Table 5.1 Ventilation System Performance Evaluation – DWPF, Zone I Exhaust Ventilation System

Evaluation Criteria	Discussion	Reference
	2 - Ventilation System – Instrumentation & Control	
Provide system status instrumentation and/or alarms.	Remote (DCS) and local indications and alarms are provided. Indications include Zone 1 supply and exhaust flows, Zones 1 ,2, and 3 pressures, and sand filter differential pressure. The sand filter inlet plenum pressure is monitored by redundant pressure indicating loops. This signal is used for control of the exhaust fan flows and also feeds redundant SS interlocks that will shut down the Zone 1 supply fans based on a high-high inlet plenum pressure. Inlet plenum pressure is used to verify that the Zone 1 exhaust fans are operating at sufficient capacity to ensure that Zone 1 is at a negative pressure and airflow through the sand filter is maintained. **References** WSRC-SA-6 sections 4.4.46, 5.4.1 WSRC-TS-95-0019 section B3.7.1 **Gap analysis** None, SS LCS 272 provides indication of sand filter inlet plenum pressure.	ASME AG-1 DOE-HNBK-1169 ASHRAE Design Guide (Section 4)
Interlock supply and exhaust fans to prevent positive pressure differential.	Redundant SS interlock loops will stop the Zone 1 supply fans and Zone 2 exhaust fans in the event of a high-high sand filter inlet plenum pressure. Inlet plenum pressure is used to verify that the Zone 1 exhaust fans are operating at sufficient capacity to ensure that Zone 1 is at a negative pressure and airflow through the sand filter is maintained. **References** WSRC-SA-6 sections 4.4.46, 5.4.1 WSRC-TS-95-0019 section B3.7.1 **Gap analysis** None, safety significant interlock loops will stop the Zone 1 supply fans and Zone 2 exhaust fans in the event of a high-high sand filter inlet plenum pressure.	DOE-HNBK-1169 ASHRAE Design Guide (Section 4)

Attachment 4

2004-2 Table 5.1 Ventilation System Performance Evaluation – DWPF, Zone I Exhaust Ventilation System

Evaluation Criteria	Discussion	Reference
Post accident indication of filter break-through.	Continuous monitoring of the Zone 1 exhaust air between the fan house and the stack is provided. There is a Fan House Exhaust duct radiation monitor (S376-RE-0881) which is a Geiger-Mueller tube type. It monitors the gamma dose rate from the Zone 1 Ventilation system final exhaust. Both local and DCS levels and alarms are provided. The Zone 1 Isokenetic Sampler is installed on the exhaust stack between the Fan House air outlet plenum and the stack. One sample line passes through a Continuous Air Monitor (CAM) and the other through a filter paper sampler. The CAM (S376-RE-1472B) measures gross beta-gamma particulates in the air. Both local and DCS indications and alarms are provided. The air sampler (S376-RE-1472A) collects radioactive particulates on filter paper. Filters from both the sampler and CAM are analyzed in the laboratory to determine the quantity and isotopic composition of the material released to the environment. Sand filter differential pressure is monitored by the DCS and SS LCS272. Backup power is supplied to the systems. No credit is taken in the DSA for a functional post accident indication of sand filter breakthrough. The sand filter is a robust structure that is designed to remain functional during accidents for which it is credited. The online stack monitoring system is not qualified or required by the DSA for NPH events. <u>References</u> G-SYD-S-00032 G-SYD-S-00041 <u>Gap analysis</u> None.	TECH-34

Attachment 4
2004-2 Table 5.1 Ventilation System Performance Evaluation – DWPF, Zone I Exhaust Ventilation System

Evaluation Criteria	Discussion	Reference
Reliability of control system to maintain confinement function under normal, abnormal and accident conditions.	The primary controls for the Zone 1 exhaust system are through the DCS system. Fan starts and stops are performed remotely from the central control room in building 210-S. The DCS is used for system monitoring as well as flow and pressure controls. The DCS is functionally classified as PS and is not qualified to ensure operability during or after an accident. It is not expected that an accident, other than a seismic or tornado event, would directly affect the DCS reliability or functionality. A local control station (LCS-272) at the fan house provides backup fan controls. Its SS function is to automatically restart at least one exhaust fan after the loss and restoration of electrical power. It also provides local alarms and manual controls for operator use. LCS-272 will automatically assume control of the exhaust system if it detects a loss of digital output power from the DCS. As an additional backup, manual start & stop switches are located at load centers B9 and B10 so that an operator can start an exhaust fan in the event of a control system failure. The manual switches are classified SS. The redundant interlocks that shut down the Zone 1 supply fans and Zone 2 exhaust fans are classified SS and are hardwired. Electrical power is provided by qualified SS load centers with automatic backup power provided by SS diesel generators. <u>References</u> G-SYD-S-00041 WSRC-SA-6 sections 4.4.46, 5.4.1 <u>Gap analysis</u> None. Under normal operations, the Zone 1 exhaust fans are controlled by a PS control system (DCS). However, the DCS has been very reliable and there are multiple credited back up design features available, some requiring operator actions, to ensure that the fans remain in service.	DOE-HNBK-1169 (2.4)

Attachment 4
2004-2 Table 5.1 Ventilation System Performance Evaluation – DWPF, Zone I Exhaust Ventilation System

Evaluation Criteria	Discussion	Reference
Control components should fail safe.	The safety interlocks are designed to activate on a loss of control power or a failed pressure instrument. The exhaust fan flow control dampers will fail open on a loss of control signal or instrument air. The fan flow control damper design includes mechanical stops that prevent the damper from going to its full closed position. This ensures that adequate flow is provided if the flow controls fail. The exhaust fans are powered from electrically operated load center breakers that require a stop signal to open. References G-SYD-S-00041 WSRC-SA-6 sections 4.4.46, 5.4.1 Gap analysis None, safety interlocks are designed to activate on a loss of control power or a failed pressure instrument.	DOE-HNBK-1169 (2.4)
3 - Resistance to Internal Events – Fire		
Confinement ventilation systems should withstand credible fire events and be available to operate and maintain confinement.	Zone 1 exhaust tunnels are concrete construction. Filtration is provided by a sand filter which should not be adversely impacted by a fire event due to its material of construction. References G-SYD-S-00041 Gap analysis None, materials of construction are not adversely affected by a fire in the Vitrification Building. Process cells and confinement would not be impacted.	DOE-HNBK-1169 (10.1) DOE-STD-1066

Attachment 4
2004-2 Table 5.1 Ventilation System Performance Evaluation – DWPF, Zone I Exhaust Ventilation System

Evaluation Criteria	Discussion	Reference
Confinement ventilation systems should not propagate spread of fire.	The Zone 1 exhaust tunnels are concrete construction. The exhaust system pulls air away from the process cells and discharges through a sand filter to the atmosphere. References G-SYD-S-00041 Gap analysis None, The Zone 1 exhaust tunnels are concrete construction and will not propagate the spread of fire.	DOE-HNBK-1169 (10.1) DOE-STD-1066
4 - Resistance to External Events – Natural Phenomena – Seismic		
Confinement ventilation systems should safely withstand earthquakes.	The Zone 1 Ventilation System meets the PC-2 DBE criteria Reference WSRC-SA-6 section 4.4.46.3 Gap analysis None, the Zone 1 Ventilation System meets the PC-2 DBE criteria	ASME AG-1 AA DOE 0420.1B DOE-HNBK-1169 (9.2)
5 - Resistance to External Events – Natural Phenomena – Tornado/Wind		
Confinement ventilation systems should safely withstand tornado depressurization.	The system is classified as SS and is not credited in the DSA for tornado events. Reference WSRC-SA-6 section 4.4.46 Gap analysis Not required by accident analysis and 2004-2 Ventilation System Evaluation Guidance Addendum.	DOE 0420.1B DOE-HNBK-1169 (9.2)

Attachment 4

2004-2 Table 5.1 Ventilation System Performance Evaluation – DWPF, Zone I Exhaust Ventilation System

Evaluation Criteria	Discussion	Reference
Confinement ventilation systems should withstand design wind effects on system performance.	The Zone 1 ventilation system design for wind meets the PC-2 requirements. Reference WSRC-SA-6 section 4.4.46.3 Gap analysis None, the Zone 1 ventilation system design for wind meets the PC-2 requirements.	DOE 0420.1B DOE-HNBK-1169 (9.2)
6-Other NP Events		
Confinement ventilation systems should withstand other NP events considered credible in the DSA where the confinement ventilation system is credited.	The Zone 1 Exhaust ventilation system is not credited to perform any safety function during or following any other NP events.. Reference WSRC-SA-6 Gap analysis None.	DOE 0420.1B DOE-HNBK-1169 (9.2), Section 2.4 – Emergency Consideration
7- Range Fires/Dust Storms		
Administrative Controls should be established to protect confinement ventilation systems from barrier threatening events	Savannah River Forestry Department is responsible for fire fighting efforts in regards to wildland fires. If the fire encroaches upon an operating area, the Savannah River Site Fire Department will direct extinguishing efforts. Ground cover around the Vitrification Building is kept to a minimum, grass and small bushes. The Emergency Operating Center (EOC) per EPIP6Q-123, Graded ERO (Emergency Response Organization) Response, Attachment 3 Forest Fire, is responsible for providing protective actions for personnel and SRS facilities and equipment. Reference WSRC-SA-6 Gap analysis None.	DOE 0420.1B

Attachment 4

2004-2 Table 5.1 Ventilation System Performance Evaluation – DWPF, Zone I Exhaust Ventilation System

Evaluation Criteria	Discussion	Reference
	8 - Testability	
Design supports the periodic inspection & testing of filters and housing, and test & inspections are conducted periodically.	The sand filter design includes access points for aerosol testing of filter efficiency. Sand filter testing is performed every 18 months per the requirements in TSR SR 4.7.1.6. Inspections of the sand filter structure are performed as part of the Structural Integrity program. References WSRC-TS-95-0019 T-DS-S-00073 Gap analysis None, design supports the periodic inspection & testing of filters and housing, and test & inspections are conducted periodically as described above.	DOE-HNBK-1169 (2.3.8) ASME AG-1 ASME N510
Instrumentation required to support system operability is calibrated.	Instruments that are credited with performing a safety function (i.e., the interlock loops) are calibrated per TSR surveillance requirement 4.7.1.2. Instrumentation that is not safety related but is used for system performance monitoring is included in the DWPF Preventive Maintenance program and is scheduled for periodic calibration. References WSRC-TS-95-0019 sections 4.7.1 & 5.8.2.8 Gap analysis None	DOE-HNBK-1169 (2.3.8)

Attachment 4
2004-2 Table 5.1 Ventilation System Performance Evaluation – DWPF, Zone I Exhaust Ventilation System

Evaluation Criteria	Discussion	Reference
Integrated system performance testing is specified and performed.	Integrated system testing was performed as part of the DWPF Startup Program. The Zone 1 ventilation system operating parameters are continuously monitored to identify any abnormal conditions. Specific operability tests are periodically performed as specified in the TSRs. **References** WSRC-TS-95-0019 section 4.7.1 WSRC-SA-6 section 10.7 **Gap analysis** None	DOE-HNBK-1169 (2.3.8)
9 - Maintenance		
Filter service life program should be established.	There are no service life limitations established for sand filters. The sand filter is anticipated to perform its safety function for the life of the facility. Sand filters at SRS of similar design to the DWPF sand filter have been in satisfactory service for over 30 years. Filter pressure drop is continuously monitored by the DCS. The DWPF sand filter has performed for 12 years while maintaining a consistent pressure differential. Sand filter efficiency testing is performed every 18 months per the requirements in TSR SR 4.7.1.6. The Structural Integrity program includes inspections of the sand filter structure. **References** DOE-HDBK-1169 sections 3.5 and 9.3 G-SYD-S-00041 **Gap analysis** None	DOE-HNBK-1169 (3.1 & App C)

Attachment 4
2004-2 Table 5.1 Ventilation System Performance Evaluation – DWPF, Zone I Exhaust Ventilation System

Evaluation Criteria	Discussion	Reference
	10 - Single Failure	
Failure of one component (equipment or control) shall not affect continuous operation.	Does not apply to Safety Significant systems.	DOE O 420.1B, Facility Safety, Chapter 1, Section 3.b(8)
Automatic backup electrical power shall be provided to all critical instruments and equipment required to operate and monitor the confinement ventilation system.	Does not apply to Safety Significant systems.	DOE-HNBK-1169 (2.2.7)
Backup electrical power shall be provided to all critical instruments and equipment required to operate and monitor the confinement ventilation system.	SS backup electrical power is provided. The Zone 1 exhaust fans, critical instruments (pressure indicating and interlock loops), and backup controls (LCS-272) are provided with diesel generator power. References WSRC-TS-95-0019 section 4.9.1 WSRC-SA-6 section 4.4.47 Gap analysis None	DOE-HNBK-1169 (2.2.7)
	11 - Other Credited Functional Requirements	
Address any specific functional requirements for the confinement ventilation system (beyond the scope of those above) credited in the DSA.	No other functional requirements are specified in the FSAR.	10 CFR 830, Subpart B

Attachment 5 – 2004-2 Table 5.1

Zone 2 and Zone 3 Ventilation Systems

Attachment 5
2004-2 Table 5.1 Ventilation System Performance Evaluation – DWPF, Vitrification Building Zone 2 and 3 Ventilation Systems

Evaluation Criteria	Discussion	Reference
	1 - Ventilation System – General Criteria	
Pressure differential should be maintained between zones and atmosphere.	Zone 3 includes clean offices, Field Operating Stations (FOS) 1 and 2, clean machine shops, clean equipment area, and other clean personnel areas on the Vitrification Building, level 2. These areas are maintained at a positive pressure relative to areas in Zones 1, 2 and 2B. However, Zone 3 pressure is slightly below atmospheric outdoor pressure. The Zone 3 areas inside the Vitrification Building level 2 are cooled and ventilated using 100% outdoor air. Zone 2 includes the normally occupied regulated operating areas in the Vitrification Building and the HP areas in the Service Building. These areas have the potential for contamination and are maintained at a sub-atmospheric pressure, which is higher than Zone 1, but less than Zone 3. Zone 2B is the operating area in the Vitrification Building between Zone 2 and Zone 1 and is maintained at a pressure between that of Zone 2 and Zone 1. Zone 2B includes the fume and radiobench hoods in the Analytical Lab, off-gas sampling hoods, the mercury distillation hoods and storage cabinet, and two cell entry/exit hoods. Reduction in the spread of contamination from these areas is accomplished by the Zone 2 HEPA Filter Exhaust System which takes suction from and establishes negative pressure in all Zone 2 areas. Airflow is from Zone 3 to Zone 2 to Zone 2B to the Zone 2 exhaust stack or from Zone 2 directly to the Zone 2 exhaust stack. A Zone 2 area does not supply air to another Zone 2 area, except that Zone 2 air from the Level 1 East Regulated Corridor is used to supply the CDMC Airlock. The exhaust from the Weld Test Cell Exhaust System is directed to the Zone 2 HEPA Filter Exhaust System. Zone 2 includes two types of air supply systems: An outdoor air supply which includes filtration, heating and cooling as necessary for temperature and humidity control and a cascaded air supply which takes suction from clean indoor sources (Zone 3) and reconditions it for use in other areas. Except for airflow to Zone 1 and the air supplied to the Sample, Analytical, and Mercury Purification Cells, all Zone 2 areas are exhausted through the Zone 2 HEPA Filter Exhaust System. Key system parameters, such as differential pressure, pressure , and flow are monitored by the Distributed Control System (DCS). <u>Standards</u> DOE Nuclear Air Cleaning Handbook 1169 Section 2.2.9 – Confinement Selection Methodology <u>References</u> G-SYD-S-00042, Rev. 6, Defense Waste Processing Facility System Design Description Zone 2 Ventilation System WSRC-SA-6, Rev. 25, S-Area Defense Waste Processing Facility Final Safety Analysis Report <u>Gap Analysis</u> • None, differential pressures are maintained between zones and the atmosphere..	DOE-HNBK-1169 (2.2.9) ASHRAE Design Guide

Attachment 5
2004-2 Table 5.1 Ventilation System Performance Evaluation – DWPF, Vitrification Building Zone 2 and 3 Ventilation Systems

Evaluation Criteria	Discussion	Reference
Materials of construction should be appropriate for normal, abnormal and accident conditions.	The material of construction for the 221-S Process Building Ventilation System filter housings is stainless steel (304L). Zone 2 and 3 fans are not constructed of stainless steel (with the exceptions of the three Sample, Analytical, and Mercury Purification Cell Entry/Exit Hood Exhausts Fans) Most of the ductwork is galvanized steel. The 221-S Zones 2 & 3 Ventilation System fans are located on Building roofs and are exposed to the weather. Large sections of associated ductwork are located outside the 221-S Building and are exposed to the weather. Existing exterior equipment material is subject to corrosion. Periodic inspections and System Health Performance Monitoring detect area in which maintenance is required. Areas with the highest potential for contamination pass through a set of HEPA filters prior to passing to the outdoor duct work and subsequently to the Zone 2 Exhaust HEPA Filters. Duct construction in accordance with Bechtel Technical Specification M-126 which was derived from SMACNA Standards. Zones 2 & 3 Ventilation Systems component materials have been adequate to meet system operational requirements. <u>Standards</u> DOE Nuclear Air Cleaning Handbook 1169 Section 2.2.5 - Corrosion ASME AG-1 <u>References</u> G-SYD-S-00042, rev. 6; WSRC-SA-6, Rev. 25. <u>Gap Analysis</u> • None.	DOE-HNBK-1169 (2.2.5) ASME AG-1

Attachment 5

2004-2 Table 5.1 Ventilation System Performance Evaluation – DWPF, Vitrification Building Zone 2 and 3 Ventilation Systems

Evaluation Criteria	Discussion	Reference
Exhaust system should withstand anticipated normal, abnormal and accident system conditions and maintain confinement integrity.	The 221-S Zones 2 & 3 Ventilations have successfully operated for 17 years during normal and abnormal conditions and has maintained confinement integrity. The FSAR does not credit the Zone 2 and Zone 3 Ventilations Systems for mitigating design basis accidents. Standards DOE Nuclear Air Cleaning Handbook 1169 Section 2.2.4 - Emergency Considerations ASME AG-1 Reference G-SYD-S-00042, rev. 6. Gap Analysis • None	DOE-HNBK-1169 (2.4) ASHRAE Design Guide
Confinement ventilation systems shall have appropriate filtration to minimize release.	The 221-S Building Zone 2 Exhaust Ventilation System is equipped with a multiple Flanders HEPA Filter Housings. Units are equipped with pre-filters; inlet and outlet isolation dampers to allow for filter change out and test connections for monitoring filter performance. Individual HEPA filters meet the requirements of SRS Engineering Standards Manual WSRC-TM-95-1, 15888 HEPA filter requirements and M-SPP-G-00243 HEPA Filter Specification. The HEPA filter banks contain in total 135 filters, each with a rating of 1500 cfm. This provides a capacity of 202,500 cfm. System flow is approximately 120,000 cfm. Standards DOE Nuclear Air Cleaning Handbook 1169 Section 2.2.1 Airborne Particulates and Gases ASME AG-1 Table FC-5140 SRS Engineering Standard 15888 ASME N509-2002 WSRC-TM-95-1, M-SPP-G-00243, HEPA Filter Specification. References G-SYD-S-00042, rev. 6. Gap Analysis • None	ASME AG-1 DOE-HNBK-1169 (2.2.1)

Attachment 5

2004-2 Table 5.1 Ventilation System Performance Evaluation – DWPF, Vitrification Building Zone 2 and 3 Ventilation Systems

Evaluation Criteria	Discussion	Reference
	2 - Ventilation System – Instrumentation & Control	
Provide system status instrumentation and/or alarms.	The 221-S Building Ventilation System instrumentation provides local and remote (DCS) indication of Zones 2 and 3 operating conditions. Trouble Alarms on the DCS alert the 221-S Control Room Operator to problems with the 221-S Building, Zones 2 and 3 areas. Filter housings also have local trouble alarms when a filter DP alarm is actuated. Standards DOE Nuclear Air Cleaning Handbook 1169 ASHRAE Design Guide (Section 4) ASME AG-1 Reference G-SYD-S-00042, rev. 6. Gap Analysis • None.	ASME AG-1 DOE-HNBK-1169 ASHRAE Design Guide (Section 4)
Interlock supply and exhaust fans to prevent positive pressure differential.	221-S Building Zone 2 Exhaust Fans and the Weld Test Cell Exhaust Fans have hard wired, Safety Significant interlocks to shut down upon Zone 1 Exhaust Inlet Plenum HIHI Pressure. DCS Interlocks for Zones 2 and 3 fans and equipment prevent pressure differential problems based on area pressures and equipment operating status. Reference G-SYD-S-00042, rev. 6. Gap Analysis • None.	DOE-HNBK-1169 ASHRAE Design Guide (Section 4)

Attachment 5

2004-2 Table 5.1 Ventilation System Performance Evaluation – DWPF, Vitrification Building Zone 2 and 3 Ventilation Systems

Evaluation Criteria	Discussion	Reference
Post accident indication of filter break-through.	The 221-S Building Ventilation System is equipped with a remote and locally-received low DP alarm for each HEPA filter section (Refer to Instrument & Control Section above). Manual sampling of the exhaust stream leaving the 221-S ventilation Zone 2 Exhaust Stack can be performed when required. Standards TECH-34 Reference G-SYD-S-00042, rev. 6. Gap Analysis • The lack of a continuous online monitoring system for the effluent air from the Zone 2 Exhaust is considered a discretionary gap in regards to Tech 34. WSRC-IM-2002-000014, SRS Air Emissions Monitoring Graded Approach, identified the Zone 2 effluent as a potential impact category III source. Monitoring requirements were changed from continuous to quarterly grab sample. Due to the cost associated with maintaining the system, and the need to replace obsolete equipment, and the change in regulatory drivers, the continuous air monitoring system was removed by J-DCP-S-03018.	TECH-34
Reliability of control system to maintain confinement function under normal, abnormal and accident conditions.	The 221-S Building Ventilation System is controlled remotely from the DCS. Zones 2 & 3 instrumentation input to the DCS and provide the Control Room Operator with plant/equipment operating conditions. DCS Alarms and Interlocks maintain system operability during abnormal conditions. Normal system operation documents system performance. Standards DOE Nuclear Air Cleaning Handbook 1169 Section 2.4 ASME AG-1 Reference G-SYD-S-00042, rev. 6. Gap Analysis • None	DOE-HNBK-1169 (2.4)

Attachment 5
2004-2 Table 5.1 Ventilation System Performance Evaluation – DWPF, Vitrification Building Zone 2 and 3 Ventilation Systems

Evaluation Criteria	Discussion	Reference
Control components should fail safe.	The Zone 1 Exhaust safety interlocks are designed to activate on a loss of control power or a failed pressure instrument. Individual Zone 2 and Zone 3 fans shut down upon a loss of power. Standards DOE Nuclear Air Cleaning Handbook 1169 Section 2.4 ASME AG-1 Reference G-SYD-S-00042, rev. 6. Gap Analysis • None.	DOE-HNBK-1169 (2.4)
3 - Resistance to Internal Events – Fire		
Confinement ventilation systems should withstand credible fire events and be available to operate and maintain confinement.	The 221-S facility is equipped with fire detection and automatic fire suppression equipment. A fire in FOS 7 & 9 Rooms, in various electrical equipment rooms or a fire in the 210-S Control Room could result in a loss of the 221-S Building, Zones 2 & 3 Ventilation System fans. The shutdown of system fans would result in the closing of associated discharge damper, and isolation of the ventilation system. The fans and the discharge dampers are located on various building roofs. There is little or no combustible material and the fire danger is minimal. Standards DOE-HNBK-1169 (10.1) DOE-STD-1066 References G-SYD-S-00042, rev. 6. F-FHA-S-00008, Rev. 2 Gap Analysis • None as this is an existing facility and this criterion is not required by accident analysis.	DOE-HNBK-1169 (10.1) DOE-STD-1066

Attachment 5
2004-2 Table 5.1 Ventilation System Performance Evaluation – DWPF, Vitrification Building Zone 2 and 3 Ventilation Systems

Evaluation Criteria	Discussion	Reference
Confinement ventilation systems should not propagate spread of fire.	During a ventilation system fire event, EOPs will instruct operations to shut down the fan. The power to the fan can be turned off from the control room. A fan fire would not impact the control room due to the separation distance. References G-SYD-S-00042, rev. 6. F-FHA-S-00008, Rev. 2 Gap Analysis • None as this is an existing facility and this criterion is not required by accident analysis.	DOE-HNBK-1169 (10.1) DOE-STD-1066
4 - Resistance to External Events – Natural Phenomena – Seismic		
Confinement ventilation systems should safely withstand earthquakes.	221-S Building Ventilation, Zones 2 & 3 ductwork and components are not qualified PC-2. Standards DOE Nuclear Air Cleaning Handbook 1169 Section 2.4 – Emergency Consideration UBC, 1979 SBC, 1979 Reference G-SYD-S-00042, rev. 6 G-SYD-S-00001, *DWPF Seismic and Structural Design* Gap Analysis • None. The FSAR does not credit the Zones 2 & 3 Ventilation Systems during or following a seismic event. Per DOE Guidance Addendum assessment is not required.	ASME AG-1 AA DOE 0420.1B DOE-HNBK-1169 (9.2)

Attachment 5

2004-2 Table 5.1 Ventilation System Performance Evaluation – DWPF, Vitrification Building Zone 2 and 3 Ventilation Systems

Evaluation Criteria	Discussion	Reference
	5 - Resistance to External Events – Natural Phenomena – Tornado/Wind	
Confinement ventilation systems should safely withstand tornado depressurization.	Zone 2 and Zone 3 Ventilation Systems are not tornado qualified. Tornado Dampers are provided at each location where a Zone 2 duct penetrates the Vitrification Building roof or wall. Standards DOE Nuclear Air Cleaning Handbook 1169 Section 2.4 – Emergency Consideration Reference G-SYD-S-00042, rev. 6 Gap Analysis • None. The DSA does not credit the Zones 2 & 3 Ventilation Systems during or following a Tornado event. Per DOE Guidance Addendum assessment is not required.	DOE 0420.1B DOE-HNBK-1169 (9.2)
Confinement ventilation systems should withstand design wind effects on system performance.	Zone 2 and Zone 3 Ventilation systems are not credited as being PC-2 qualified, however,the systems are designed for wind loads in accordance with Section 6.0 of Maximum Design Loads for Buildings and Other Structures, ANSI A58.1-1982, with the term (IV) equal to 110 mph in Equation 3 of Section 6.5.1. Standards DOE Nuclear Air Cleaning Handbook 1169 Section 2.4 – Emergency Consideration Reference G-SYD-S-00042, rev. 6 Gap Analysis • None.	DOE 0420.1B DOE-HNBK-1169 (9.2)

Attachment 5

2004-2 Table 5.1 Ventilation System Performance Evaluation – DWPF, Vitrification Building Zone 2 and 3 Ventilation Systems

Evaluation Criteria	Discussion	Reference
	6-Other NP Events	
Confinement ventilation systems should withstand other NP events considered credible in the DSA where the confinement ventilation system is credited.	**The Zone** 2 and 3 Ventilation Systems are **not credited to perform any safety function during or following any other NP events..** **Reference** **WSRC-SA-6** **Gap analysis** **None.**	**DOE 0420.1B** **DOE-HNBK-1169 (9.2), Section 2.4 – Emergency Consideration**
	7- Range Fires/Dust Storms	
Administrative Controls should be established to protect confinement ventilation systems from barrier threatening events	**Savannah River Forestry Department is responsible for fire fighting efforts in regards to wildland fires. If the fire encroaches upon an operating area, the Savannah River Site Fire Department will direct extinguishing efforts. Ground cover around the Vitrification Building is kept to a minimum, grass and small bushes.** The Emergency Operating Center (EOC) per EPIP6Q-123, Graded ERO (Emergency Response Organization) Response, Attachment 3 Forest Fire, is responsible for providing protective actions for personnel and SRS facilities and equipment. **Reference** **WSRC-SA-6** **Gap analysis** **None**	**DOE 0420.1B**

Attachment 5
2004-2 Table 5.1 Ventilation System Performance Evaluation – DWPF, Vitrification Building Zone 2 and 3 Ventilation Systems

Evaluation Criteria	Discussion	Reference
	8 - Testability	
Design supports the periodic inspection & testing of filters and housing, and test & inspections are conducted periodically.	The 221-S Building Ventilation System HEPA filter assembly is equipped with inlet and outlet testing fittings to allow for HEPA filter performance testing. The facility has established a preventative maintenance program which requires that these filters undergo performance testing every 18 months. An additional PM requires that these filters be replaced every 7 years. In-place leak testing is performed for this HEPA filter system in accordance with Site Engineering Standards. Standards DOE-HNBK-1169 (2.3.8) ASME AG-1 ASME N510 SRS Engineering Standard 15888 References G-SYD-S-00042, rev. 6 Gap Analysis None	DOE-HNBK-1169 (2.3.8) ASME AG-1 ASME N510
Instrumentation required to support system operability is calibrated.	All instrumentation is calibrated prior to being placed inservice. Pressure/flow instrumentation associated with the 221-S Building, Zones 2 & 3 Ventilation Systems are calibrated on a regular basis. Other instruments are calibrated when malfunction is suspected or they are replaced. Standards DOE-HNBK-1169 (2.3.8) References Work Management System - Passport Gap Analysis None	DOE-HNBK-1169 (2.3.8)

Attachment 5
2004-2 Table 5.1 Ventilation System Performance Evaluation – DWPF, Vitrification Building Zone 2 and 3 Ventilation Systems

Evaluation Criteria	Discussion	Reference
Integrated system performance testing is specified and performed.	Zone 2 Ventilation system under went extensive system testing and startup testing. System testing is performed via the operating procedures for the system, which establish operating criteria such as flow and differential pressure. Modifications made to the system are required to undergo Post Modification Testing to ensure compliance with system performance requirements. There are currently no required response actions for the PVVS in the DSA. **The hardwire interlock for high sand filter inlet plenum pressure is tested on an annual basis as required by the TSRs.** Standard DOE-HNBK-1169 (2.3.8) Gap Analysis • None	DOE-HNBK-1169 (2.3.8)
9 - Maintenance		
Filter service life program should be established.	The facility has established a preventative maintenance program which requires that these filters undergo performance testing every 18 months. An additional PM requires that these filters be replaced every 7 years. In-place leak testing is performed for this HEPA filter system in accordance with Site Engineering Standards. **The shelf life for a HEPA filter used at SRS shall be** no greater than 3 years unless **specified otherwise by the filter manufacturer.** Standards DOE Nuclear Air Cleaning Handbook 1169 Section 3.1 and Appendix C SRS Engineering Standard 15888 Reference Work Management System - Passport Gap Analysis None	DOE-HNBK-1169 (3.1 & App C)

Attachment 5
2004-2 Table 5.1 Ventilation System Performance Evaluation – DWPF, Vitrification Building Zone 2 and 3 Ventilation Systems

Evaluation Criteria	Discussion	Reference
	10 - Single Failure	
Failure of one component (equipment or control) shall not affect continuous operation.	Does not apply to Safety Significant systems.	DOE O 420.1B, Facility Safety, Chapter 1, Section 3.b(8)
Automatic backup electrical power shall be provided to all critical instruments and equipment required to operate and monitor the confinement ventilation system.	Does not apply to Safety Significant systems.	DOE-HNBK-1169 (2.2.7)
Backup electrical power shall be provided to all critical instruments and equipment required to operate and monitor the confinement ventilation system.	Backup electrical power is provided to the Zone 2 HEPA Filter Exhaust Fans and the Sample, Analytical Purification Entry/Exit Hood Exhaust Fans. They would need to be manually restarted after backup power is initiated. <u>Reference</u> G-SYD-S-00042, rev. 6 <u>Gap Analysis</u> • None.	DOE-HNBK-1169 (2.2.7)
	11 - Other Credited Functional Requirements	
Address any specific functional requirements for the confinement ventilation system (beyond the scope of those above) credited in the DSA.	The Vitrification Building Zone 2 and 3 Ventilation System is not credited with any specific safety control in the DWPF FSAR. <u>References</u> WSRC-SA-6, Rev. 24 <u>Gap Analysis</u> None	10 CFR 830, Subpart B

Attachment 6 – DWPF Vitrification Building Ventilation Systems Facility Evaluation Team

Jean Ridley – DOE-SR, DWPF Facility Engineer

Jean Ridley has been assigned the DWPF facility engineer for over 4 years with responsibility for the DWPF Authorization Basis and Safety Systems Oversight. Jean has been both a program and project engineer during her 15 years at the Savannah River Site in Nuclear Materials, Waste Disposition and Facility Infrastructure.

Michael Potvin- WSRC, FET Lead, Waste Solidification Engineering

Michael Potvin is a 1985 graduate of Virginia Polytechnic Institute and State University with a degree in Mechanical Engineering. Mike has been at the Savannah River Site for 22 years. Mike is currently assigned as a Principal Engineer at the Defense Waste Processing Facility (DWPF) where he is working in the area of safety analysis. While at DWPF, Mike has also served in the role as a plant/system engineer, Shift Technical Engineer, and Control Room Manager. He has also worked in the Reactor Works Engineering Department, where he served as a plant engineer specializing in predictive maintenance and as the manager of the predictive maintenance group.

Tom Berkery – WSRC, Waste Solidification Cognizant Engineer

Tom Berkery has worked as a mechanical engineer at the Savannah River Site for almost 19 years, including 3 years as a Shift Technical Engineer. His primary assignment has been as an HVAC system engineer for the DWPF and Saltstone facilities. Tom is a member of the SRS Ventilation and Filtration Technical Committee.

Al George – WSRC, Waste Solidification Cognizant Engineer

Al George has worked in System Engineering at the Savannah River Site for almost 20 years. His primary assignment has been as an HVAC system cognizant engineer for the DWPF facility.

Latricia Jones – WSRC, Waste Solidification Cognizant Engineer

Latricia Jones has a Bachelor of Science Degree in Mechanical Engineering from Michigan State University. She has worked at the Savannah River Site for 18 years. Latricia's work experience includes chemical receipt and processing, production computer systems, laboratory remote equipment, compressed gases, procurement, process ventilation, and participation in a facility startup. Latricia is currently working as the Design Authority for the Remote Sampling System, Flush Water System, and the Process Vessel Ventilation Systems for both the DWPF and 512-S Facilities at SRS.

Lynh Nguyen – WSMS, Safety Analysis Engineer

Lynh Nguyen has worked in the private sector as an environmental and process engineer at a chemical facility. She was a startup test engineer for several of the facility chemical processes. Lynh Nguyen has 9 years work experience in the field of safety analysis for Safety Basis documentation at the Savannah River Site. Her expertise has been in performing Hazard Analysis, Hazard Assessment Documentation, Auditable Safety Analysis, Health and Safety Plan, Chemical Analysis and Regulatory Services. She has developed and revised Documented Safety Analyses for DOE nuclear facilities. She has developed and implemented Hazards Analysis and Functional Classification training for various DOE nuclear facilities.

Bill Pitka – WSMS, Safety Analysis Engineer

William Pitka has a Nuclear Engineering Master Degree and has worked in the public and private sector for more than 25 years in design, startup and operation of nuclear facilities. He has operated nuclear plants for the United States Government and has been a startup engineer for 4 separate commercial nuclear reactors. William Pitka has more than 2 years work experience in the field of Nuclear Safety Analysis for Safety Basis documentation at the Savannah River Site. His expertise has been in performing Unanswered Safety Questions (USQ) reviews, Hazard Analysis, Hazard Assessment Documentation, Documented Safety Analysis, Technical Safety Requirements and other Regulatory Services.

Al Cross – WSRC, Waste Solidification Quality Engineer

Alan J. Cross is the Facility Quality Assurance Engineer for the Defense Waste Processing Facility (DWPF). He has a Bachelor of Science degree in physics from Georgia State University. He is retired from the United States Coast Guard. He has been at the Savannah River Site since 1989 were he has been assigned to the Quality Assurance organization for the Separations department and to DWPF since 1992.

Sinclair White, – WSRC, Waste Solidification Operations

Sinclair M. White is the Operations Day Support Manager at the Defense Waste Processing Facility (DWPF). He has been at the Savannah River Site for 24 years. He started work at DWPF in 1988 during the construction phase. He has work in various positions in operations including Vitrification Control Room Manager and Shift Manager. He is currently the Operations Technical Safety Requirements (TSR's) and TSR Surveillance Coordinator.