FOSTER WHEELER

FOSTER WHEELER ENVIRONMENTAL CORPORATION

OAK RIDGE OPERATIONS

TRU WASTE PROCESSING CENTER

DOCUMENT NO.

T-CM-FW-R-EG-004

DNFSB Recommendation 2004-2
Process Building Ventilation System Evaluation

Revision	Prepared by	Reviewed by	Approved by	Date	Pages Affected
0	Junie Weeks, Jr. [signature]	[signature]	[signature]	12/6/06	All

Site Evaluation Team Concurrence:

[signature]
J.A. Mullis, Site Evaluation Team Leader
Senior Nuclear Safety Program Manager

7/31/2007
Date

[signature]
Stephen H. McCracken
Assistant Manager for Environmental Management

8/1/07
Date

Table of Contents

Table of Contents 2

Definitions 3

Abbreviations and Acronyms 4

Executive Summary 5

1.0 Introduction 6

1.1 Facility Overview 6

1.2 Confinement Ventilation System (CVS)/Strategy 6

1.3 Major Modifications 7

2.0 Functional Classification Assessment 7

2.1 Existing Classification 7

2.2 Evaluation 8

2.3 Summary 8

3.0 System Evaluation 8

3.1 Identification of Gaps 8

3.2 Gap Evaluation 8

3.3 Modifications and Upgrades 8

4.0 Conclusion 8

References 10

Attachment 1 – Facility Evaluation Team and Supporting Reviewers Biographical Sketches 12

Attachment 2 – Intentionally Left Blank 14

Attachment 3 – Table 4-3 Data Collection Table 15

Attachment 4 – Table 5-1 Ventilation System Performance Criteria 20

Attachment 5 – T-CM-FW-A-ME-001, R0, Main Building Ventilation System Description 37

Attachment 6 – T-CM-FW-A-EG-004, R7, Safety Significant Structures, Systems, and Components 38

Definitions

Confinement – A building, building space, room, cell, glovebox, or other enclosed volume in which air supply and exhaust are controlled, and typically filtered. (Ref. 4)

Confinement System – The barrier and its associated systems (including ventilation) between areas containing hazardous materials and the environment or other areas in the facility that are normally expected to have levels of hazardous material lower than allowable concentration limits. (Ref. 4)

Hazard Category – Hazard Category is based on hazard effects of unmitigated release consequences to offsite, onsite and local workers. (Ref. 12)

Performance Category – A classification based on a graded approach used to establish the natural phenomena hazard design and evaluation requirements for structures, systems and components. (Ref. 11)

Ventilation System – The ventilation system includes the structures, systems, and components required to supply air to, circulate air within, and remove air from a building/facility space by natural or mechanical means. (Ref. 4)

Abbreviations and Acronyms

AHU	Air Handling Unit (Supply Air)
BBA	Box Breakdown Area
CH	Contact Handled
CHGB	Contact Handled Glovebox
CIP	Capacity Increase Project
CVS	Confinement Ventilation System
DBA	Design Basis Accident
DID	Defense in Depth
DNFSB	Defense Nuclear Facility Safety Board
DOE	U.S. Department of Energy
DSA	Documented Safety Analysis
EG	Evaluation Guidelines
GB	Glovebox
HEPA	High Efficiency Particulate Air
LCO	Limiting Conditions for Operation
LPF	Leak Path Factor
MAR	Material at Risk
MBVS	Main Building Ventilation System
MEI	Maximally Exposed Individual (Co-located Worker)
MOI	Maximally Exposed Off-site Individual (Public)
NP	Natural Phenomenon
ORO	Oak Ridge Operations
ORR	Oak Ridge Reservation
PB	Process Building
RF	Respirable Fraction
RH	Remote Handled
SAC	Specific Administrative Control
SS SSC	Safety-Significant Structures, Systems, and Components
sf	square feet
SL	Sludge
SN	Supernate
SR	Surveillance Requirement
ST	Source Term
TEDE	Total Effective Dose Equivalent
TRU	Transuranic
TSR	Technical Safety Requirements
TWPC	TRU Waste Processing Center
wrt	with respect to

Executive Summary

This confinement ventilation evaluation is for the Transuranic (TRU) Waste Processing Center (TWPC) located on the Oak Ridge Reservation (ORR). This evaluation was developed in accordance with U.S. Department of Energy (DOE) evaluation guidance for Defense Nuclear Facility Safety Board (DNFSB) Recommendation 2004-2.

DOE, Ventilation System Evaluation Guidance Document, provides guidance for performing ventilation system evaluations in accordance with a plan that implements DNFSB Recommendation 2004-2. Recommendation 2004-2 noted concerns with the confinement strategy utilized or planned for in several facilities to confine radioactive materials during or following accidents. The DNFSB prefers active confinement systems that rely on motive force and filters over passive confinement systems that use facility structures and components (e.g., facility enclosure without the motive force).

This evaluation was performed in three phases. Phase I involved data gathering using Table 4.3 of the DOE guidance document. Phase II involved ventilation system evaluations using DOE guidance document Table 5.1. Phase III involved completion of the final evaluation report and submittal to the Independent Review Panel.

This subject of this evaluation was the active Main Building Ventilation System (MBVS) in the Process Building (PB). The PB is identified as Hazard Category 2. It is a relatively new facility with construction completed in late 2003.

The PB meets the wind load and seismic criteria of DOE-STD-1020-2002, Natural Phenomena Hazards Design and Evaluation Criteria for Department of Energy Facilities, for PC-2 Structures. (Ref. 8) However, the confinement ventilation system is not credited for surviving a wind or seismic event.

1.0 Introduction

The following sections provide an overview of Transuranic (TRU) Waste Processing Center (TWPC) Process Building (PB) and its associated confinement ventilation system strategy.

1.1 Facility Overview

The TWPC, located in the Melton Valley area of the Oak Ridge Operations (ORO), retrieves, treats and packages TRU/Alpha low level radioactive waste for offsite disposal.

The four waste streams either processed or planned are: (1) Supernate (SN) from Capacity Increase Project tanks, (2) Sludge (SL) from the Melton Valley Storage Tanks, (3) Contact Handled (CH) solid waste, and (4) Remote Handled (RH) solid waste. (Ref. 1, Page 2-2, 2.3)

The TWPC PB is a Hazard Category 2 facility with very little potential for accidents that result in consequences approaching the Evaluation Guidelines (EGs) to the public or off-site workers. (Ref. 1, Page 1-1, 1.1)

1.2 Confinement Ventilation System (CVS)/Strategy

This report provides an evaluation of the PB Main Building Ventilation System (MBVS) in accordance with "Deliverables 8.5.4 and 8.7 of Implementation Plan for Defense Nuclear Facility Safety Board (DNFSB) Recommendation 2004-2, Ventilation System Evaluation Guidance for Safety-Related and Non-Safety-Related Systems." (Ref. 3)

The PB is an approximately 30,000 square feet (sf) three story reinforced concrete structure having wall and floor thicknesses governed by radiation shielding requirements. (Ref. 1, Page 2-3, Paragraph 2.4) It is a passive building structure that works in conjunction with an operable ventilation system and serves as a barrier to confine release of radioactive material. The PB is credited as a passive design feature to mitigate the potential dose consequences to the co-located worker. (Ref. 1, Page 5-6, 5.3.1)

T-CM-FW-R-AD-001, TRU/Alpha Low Level Waste (LLW) Treatment Project Documented Safety Analysis (Ref. 1), currently provides, "Since the facility and/or equipment inside the facility performs SS functions, the facility is analyzed using criteria for PC-2 facilities. Although the PB is designed to withstand the DBA earthquake identified in the 1997 UBC for seismic zone 2A for Group H, Division 7 occupancy, it has not been validated to withstand PC-2 criteria specified in DOE-STD-1020-2002." (Ref. 1, Page 3-68, 3.4.2.11) T-CM-FW-C-SC-026, Seismic Evaluation, (Ref. 7) was prepared to validate that the facility design meets, or exceeds, the DOE-STD-1020-2002 criteria. The calculation demonstrates that the current design exceeds the criteria.

The PB MBVS is part of the facility confinement. It is an active system and is credited as a Safety-Significant Structure, System, and Component (SS SSC) to mitigate the potential dose consequences to the respective receptors. (Ref. 1, Page 5-6, 5.3.1) The MBVS is a once through 100% outside air system which employs two supply Air Handling Units (AHUs) and three parallel High Efficiency Particulate Air (HEPA) filter exhaust trains to condition the building and filter its discharge to the atmosphere.

The MBVS' three exhaust blowers maintain negative pressure within the PB while maintaining more potentially contaminated areas negative with respect to less potentially contaminated areas. (Ref. 1, page 5-7, 5.5.1) Management of space pressures prevents migration of radioactive materials to outside atmosphere or to building areas of lesser potential contamination. The MBVS also provides HEPA filtration of exhaust air to minimize the release of radionuclide particulate emissions to the environment. (Ref. 1, page 5-7, 5.5.1)

Exhaust air from more potentially contaminated areas including the Glovebox (GB), Box Breakdown Area (BBA), and Hot Cell is HEPA filtered locally to maintain confinement before entering the main exhaust duct. Exhaust air is then again filtered by two stages of HEPA filters, arranged in series, when it passes through Filter Housings F-011, F-012, and F-013.

T-CM-FW-A-ME-001, Main Building Ventilation System Description, included as Attachment 5, provides a more detailed description of the ventilation system. T-CM-FW-A-EG-004, Safety Significant Structures, Systems, and Components, included as Attachment 6, identifies MBVS safety significant components and boundaries.

Table 4-3, Data Collection Table presents evaluation responses taken from the Documented Safety Analysis (DSA) as directed by U.S. Department of Energy (DOE) evaluation guidance. (Ref. 3)

The background for information provided in Table 4-3 follows the table.

1.3 Major Modifications

Systems and components associated with RH and SL processing are presently being installed; however, ventilation systems for these processes are constructed, in place, and ready to operate pending testing. These associated ventilation systems will be loaded with filters, tested and balanced prior to process startup.

2.0 Functional Classification Assessment

2.1 Existing Classification

The PB ventilation system is an active system designated as a SS SSC. (Ref. 1, page 4-5, 4.4.3.1)

2.2 Evaluation

The safety function of the PB ventilation system is to provide confinement to potential airborne radioactive material, preventing release of radioactive material from the PB from fires involving exposed waste in the GB and BBA. (Ref. 1, page 3-31, 3.3.2.3.3)

The Design Basis Accident (DBA) identified is a potential fire in the Contact Handled Glovebox (CHGB). (Ref. 1, page 3-45, 3.4.2.1)

The unmitigated estimate of the radiological consequences to the maximally exposed member of the public is 5.1 E-01 rem. This is well below the EG of 25 rem discussed in Appendix A of DOE-STD-3009-94 (Ref. 13). Thus, the predicted dose consequence is considered not to challenge the EG. The consequence to the Maximally Exposed Individual (MEI) and the facility worker are determined to be moderate. (Ref. 1, page 3-48, 3.4.2.1.5)

2.3 Summary

The Safety Significant functional classification of the existing active CVS is appropriate.

3.0 System Evaluation

The PB active CVS was evaluated in accordance with Attachment 3, Table 4.3 and Attachment 4, Table 5-1. Table 4.3 was developed from the DSA using a potential fire in the CHGB as the DBA. (Ref. 1, page 3-45, 3.4.2.1)

3.1 Identification of Gaps

No Gaps were identified.

3.2 Gap Evaluation

Not Applicable

3.3 Modifications and Upgrades

Not Applicable

4.0 Conclusion

The PB ventilation system is designed to operate during normal operations and during a CHGB fire. The PB ventilation system is not credited for maintaining confinement during any other conditions.

A potential fire involving flammable liquid or combustibles packaged in CH solid waste containers leading to uncontrolled release of the radioactive contaminant was considered as the bounding accident to be mitigated by the confinement ventilation system. The dominant release anticipated is from burning contaminated waste in the CHGB during visual examination and repackaging. (Ref. 1, Page 3-45, 3.4.2.1)

T-CH-FW-R-AD-001, Glove Box Design Basis Fire Impacts Analysis on Main Building Ventilation HEPA Trains (Ref. 7) evaluates the effects a fire in the CHGB would have on the F-011, F-012, and F-013 HEPAs. It concludes the HEPAs will perform their safety function of mitigating a release to the environment during a fire in the CHGB.

The summary presented in Attachment 3, Table 4-3 demonstrates the confinement ventilation system meets the Table 4-3 performance criteria evaluated. Evaluation of the confinement ventilation system against the ventilation system general performance criteria, included Attachment 4, Table 5-1, further validates the ventilation system's capability to perform its safety significant confinement function.

Based on the results of this evaluation, no gaps or modifications to the PB ventilation system are required.

References

1. T-CM-FW-R-AD-001, R12, TRU/Alpha Low Level Waste (LLW) Treatment Project Documented Safety Analysis

2. T-CM-FW-X-AD-022, R11, Technical Safety Requirements for TRU/Alpha Low Level Waste Treatment Project

3. U.S. Department of Energy, "Deliverables 8.5.4 and 8.7 of Implementation Plan for DNFSB Recommendation 2004-2, Ventilation System Evaluation Guidance for Safety-Related and Non-Safety-Related Systems," dated January 2006

4. DOE-HDBK-1169-2003, DOE Nuclear Air Cleaning Handbook

5. T-CM-FW-X-OP-006, R3, WPF CH Round Sheets

6. T-CM-FW-R-AD-002, R7, TRU/Alpha Low Level Waste Processing Project Fire Hazards Analysis

7. T-CH-FW-R-AD-001, R0, TRU/Alpha Low Level Waste Processing Project Glove Box Design Basis Fire Impacts Analysis on Main Building Ventilation HEPA Trains

8. T-CM-FW-C-SC-026, R0, TRU/Alpha Low Level Waste Processing Project DOE-STD-1020-2002, PC-2 Seismic Evaluation

9. T-CM-FW-C-SC-027, R0, TRU/Alpha Low Level Waste Processing Project DOE-STD-1020-2002, PC-2 Wind Load Evaluation

10. T-CM-FW-P-MT-506, R5, Main Building Ventilation System Preventive Maintenance

11. DOE-STD-1021-93, Natural Phenomena Hazards Performance Categorization Guidelines for Structures, Systems and Components

12. DOE-STD-1027-92, Hazard Categorization and Accident Analysis Techniques for Compliance with DOE Order 5480.23, Nuclear Safety Analysis Reports

13. DOE-STD-3009-94, Preparation Guide for U.S. Department of Energy Nonreactor Nuclear Facility Safety Analysis Reports

14. T-CM-FW-A-EG-008, R2, System Engineer Program Description

Attachments

1. Facility Evaluation Team and Supporting Reviewers Biographical Sketches
2. Intentionally Left Blank
3. Table 4-3 Data Collection Table
4. Table 5-1 Ventilation System Performance Criteria
5. T-CM-FW-A-ME-001, R0, Main Building Ventilation System Description
6. T-CM-FW-A-EG-004, R7, Safety Significant Structures, Systems, and Components

Attachment 1 – Facility Evaluation Team and Supporting Reviewers Biographical Sketches

Junie Weeks
TRU Waste Processing Center Ventilation Cognizant System Engineer

Mr. Weeks holds a Bachelor of Science Degree in Mechanical Engineering from Virginia Tech. He is a licensed Professional Engineer with approximately 30 years experience, which includes 17 years experience working with nuclear confinement ventilation systems associated with the DOE Oak Ridge facilities. He designed the TWPC PB confinement ventilation system and has been its responsible engineer since late 1999.

Steve Hughes
TRU Waste Processing Center Safety Basis/Analysis Subject Matter Expert

Mr. Hughes holds a Bachelor of Science Degree in Chemical Engineering from the Colorado School of Mines. He has 17 years experience in nuclear facilities associated with the DOE Complex. He has 8 years of experience in Safety Basis development and implementation and is currently the Safety Authorization Basis Manager for the TWPC.

Chris Thompson
TRU Waste Processing Center Facility Manager

Over 20 years of nuclear experience with progressively increasing level of authority and responsibility. An experienced Senior Manager and Project Manager who has demonstrated the ability to manage large staffs and technically difficult projects. Recognized as having the ability to effectively interface with senior DOE, DOD and customer officials as well as engineers and craft personnel. Sets high standards and has the leadership skills to motivate the people to meet or exceed the standards.

EDUCATION

- Masters of Science, Mechanical Engineering Naval Post Graduate School
- Marine Engineering & Naval Architecture courses Massachusetts Institute of Technology;
- Bachelors of Science Meteorology, University of Utah
- United States Navy Nuclear Power Propulsion Training
- Armed Forces Staff College

Attachment 1 – Facility Evaluation Team and Supporting Reviewers Biographical Sketches (continued)

J. G. Wagner, P.E.
TRU Waste Processing Center Design Manager

Mr. Wagner obtained a Bachelor of Science Degree in Mechanical Engineering from Indiana Institute of Technology and is a registered Professional Engineer with approximately 26 years experience, including 19 years experience designing systems for commercial and DOE owned nuclear facilities. He has been the Design Manager for the TWPC since late 1999.

Attachment 2 – Intentionally Left Blank

Attachment 3 – Table 4-3 Data Collection Table

Confinement Documented Safety Analysis Information										
Facility: TRU Waste Processing Center			Hazard Category 2					Performance Expectations		
Bounding Accidents[1]	Type Confinement[2]		Doses Bounding unmitigated/ mitigated[3]	Confinement Classification[4]			Function (see list)[5]	Functional Requirements[6]	Performance Criteria[7]	Compensatory Measures[8]
	Active	Passive		SC	SS	DID				
3.4.2.1 Contact Handled Glovebox (CHGB) Fire (Page3-45)	5.3.1 Active		3.4.2.1.4 Maximally Exposed Off-site Individual (MOI or Public); 5.1 E-01 rem Unmigitated 5.1 E-03 rem Mitigated Maximally Exposed Individual (MEI or co-located worker) 8.6 E+01 rem Unmigitated 8.6 E-01 rem Mitigated (Page 3-46) Complies with DOE-STD-3009, Appendix A; An unmitigated LPF of 1.0 was assumed		4.4.3.1 SS P. 4-5 See T-CM-FW-A-EG-004 For boundaries and specific identification Of SS components		4.4.3.1 Confinement for In-facility, Collocated Worker, & public Protection NOTE: 4.4.3.4 MBVS must be operational during waste processing or when CH waste is exposed in the GB or BBA	4.4.3.3 Safety functions include ensuring confinement of radiological material by maintaining the PB at a negative pressure with respect to atmosphere and providing filtration of the exhaust during normal operations 4.4.3.5 Mitigates fire in the CHGB 3.3.2.3.2 HEPA filters are used at local process exhausts to provide DID The confinement ventilation system is not credited for a seismic event.	4.4.3.3 Maintain negative pressure by exhausting a minimum of 15,000 scfm more flow than supplied and maintaining the 99% efficient on 0.3 micron HEPA filters operable to filter building exhaust air 4.4.3.4 HEPA filters are rated for a minimum of 1,250 scfm and 180°F	The confinement ventilation system meets all the performance criteria. There are no compensatory measures.

Attachment 3 – Table 4-3 Supporting Data

Column 1 - The "Bounding Design Basis Accident" is a CHGB Fire.

A potential fire involving flammable liquid or combustibles packaged in CH solid waste containers leading to uncontrolled release of the radioactive contaminants was considered as the bounding accident at the Waste Processing Facility. (Ref. 1, Page 3-44, 3.4.2.1)

Should the fire occur, an operable PB ventilation system, including the presence of MBVS HEPA filters, is required as an SS SSC to mitigate the dose consequences of the postulated fire in the CHGB. (Ref. 1, Page 3-47, 3.4.2.1.6)

Column 2 - The "Type Confinement" is Active.

The CVS is an active system and has associated Limiting Conditions for Operation (LCO) controls. (Ref. 1, Page 5-6, 5.3.1, Paragraph 3)

Column 3 - "Doses Bounding Unmitigated/Mitigated"

The unmitigated estimate of the radiological consequences to the maximally exposed member of the public is 5.1 E-01 rem for the bounding scenario. (Ref. 1, Page 3-47, 3.4.2.1.5)

The unmitigated radiation dose consequence to the MEI is 8.6E+01rem. (Ref. 1, Page 3-46, 3.4.2.1.4)

One stage of HEPA filtration with a credited removal efficiency of 99% effectively reduces the Leak Path Factor (LPF) to 1E-02. (Ref. 1, Page 4-6, 4.4.3.3) This basis results in a mitigated dose which is 1% of the unmitigated dose. The resulting mitigated doses are as follows:

The mitigated estimate of the radiological consequences to the maximally exposed member of the public becomes 5.1 E-03 rem for the bounding scenario.

The mitigated radiation dose consequence to the MEI becomes 8.6E-01rem.

Dose rate is calculated as follows: (Ref. 1, Page 3-46, 3.4.2.1.3, Material at Risk)

This scenario involves the contents of seven drums in the GB. It is postulated that the contents of the drums and waste box are exposed in the CHGB in the process of repackaging. The contents of the waste box do not materially contribute to the available combustible material or Material at Risk (MAR) assumed in the event. The waste box and contents are typically metal. The waste box is also separated by distance and elevation from the waste in the GB. Further, the box is below and distant from the path of the exhaust gases that might result from a GB fire. Finally, the MAR in the waste

boxes is below the 95th percentile drum contents. It is assumed that the radionuclide content of a volume of drums and box waste that could be present in the two connected containments (CHGB) is exposed to a sustained thermal stress. The facility's mission is to repackage drums to meet Waste Isolation Pilot Plant Waste Acceptance Criteria. Therefore, the contents of a high MAR drum will repackaged with the compatible contents of lower MAR drums. The MAR for this scenario is assumed to involve a total MAR of 25 PE Ci (Plutonium Equivalent Curies) with a damage ratio of 100%. This is very conservative since the drum with the highest MAR contents contains sealed sources confined in a metal enclosure. The material is modeled as unconfined combustible material, which is also extremely conservative since the combustible material is confined in non-combustible stainless steel trays and at least partially packaged in bags, can, and other containers until the final sorting step. Therefore, the Source Term (ST) is calculated as

$$ST = 2.50E+01PECi \times 1E-02 \times 1.0 \times 1.0$$
$$ST = 2.5E-01PECi$$

The potential dose consequence per unit of radioactivity released to the environment for a non-lofted plume is

$$PotentialDoseConsequenceMOI = \chi / Qs / m3 \times BRm3 / s \times DCFrem / PECi$$
$$PotentialDoseConsequenceMOI = 1.05E-04 \times 3.33E-04 \times 3.08E+08$$
$$PotentialDoseConsequenceMOI = 1.08E+01rem / Ci$$

at 1400 m for the sector-dependent 95th percent result. The radiation dose consequence to the MOI or Total Effective Dose Equivalent (TEDE) is then:

$$TEDE = 2.5E-01PECi \times \frac{1.08E+01}{5.2} rem / PECi = 5.1E-01rem$$

The potential dose consequence per unit of radioactivity released at 100 m is:

$$PotentialDoseConsequenceMEI = \chi / Qs / m3 \times BRm3 / s \times DCFrem / PECi$$
$$PotentialDoseConsequenceMEI = 1.85E-02 \times 3.33E-04 \times 3.08E+08$$
$$PotentialDoseConsequenceMEI = 1.9E+03rem / Ci$$

The radiation dose consequence to the MEI is then:

$$TEDE = 2.50E-01PECi \times \frac{1.9E+03}{5.5} rem / PECi = 8.6E+01rem$$

Comparison to Guidelines (Ref. 1, Page 3-46, 3.4.2.1.5)

Because the postulated fire in the CHGB will be ventilation limited, transport phenomena such as agglomeration, thermophoresis, and gravitational settling will reduce the actual ST significantly. For the postulated fire, sufficient energy is not available to change the particle size distribution already present in the contaminated waste, which is assumed to be plutonium oxide contamination. Furthermore, the particle size distribution would be affected by soot generation to drive the Respirable Fraction (RF) to less than the unity value assumed in this analysis. Therefore, the calculated dose consequences estimated above are indeed conservative.

The unmitigated estimate of the radiological consequences to the maximally exposed member of the public is 5.1 E-01 rem for the bounding scenario. As discussed above, a mechanistic analysis will lead to a substantial reduction of the LPF and Airborne Release Fraction × RF. While the magnitude of reduction is only qualitatively evaluated, the CHGB as a noncombustible confinement feature, will decrease the radioactive release from the postulated fire. The HEPA filters, which are shown to be robust for plugging concerns, are identified as an integral part of the SS SSC. The presence of the filters has been qualitatively established to reduce the consequences by a factor of 100.

Column 4 - The "Confinement Classification" is Safety Significant (SS).

The PB ventilation system is an active system designated as a SS SSC. (Ref. 1, Page 4-5, 4.4.3.1)

Column 5 - "Function"

The heating, ventilating, and air conditioning system is designed to provide temperature and humidity control to the PB and prevent the migration of radioactive materials. (Ref. 1, Page 2-56, 2.7.1)

The ventilation system, in conjunction with the passive design of the PB structure, provides filtration of the exhaust system for the PB. The confinement limits the spread of airborne contamination, and reduces the material that is potentially released from the PB for a fire in the CHGB. The facility exhaust system includes HEPA filters to reduce the release of radionuclide particulate emission. Under accident conditions, the passive filtration function provides significant Defense in Depth (DID) by reducing the LPF, but is not specifically credited in this fashion. (Ref. 1, Page 4-5, 4.4.3.1)

Column 6 - "Functional Requirements"

The sole purpose of the AHUs is to provide temperature-conditioned air to the PB. The system has three ventilation trains in which any combination (one, two, or all three trains) may be used to generate the minimum exhaust flow. Each of the three ventilation trains has two stages of HEPA filters. Each HEPA stage provides sufficient filtration to satisfy the safety function to filter the radionuclide particulate from the exhausted air.

During a loss of electric power incident, any one of the MBVS process ventilation blowers is powered by the diesel generator to maintain PB differential pressures. (Ref. 1, Page 2-54, 2.6.1.5) This is a DID feature and is not credited as a safety feature in the DSA.

The PB ventilation system is provided to ensure confinement of radiological material during normal operations and filtration of the exhaust for the PB. The ventilation system is designed to confine radiological material by maintaining the PB at a negative pressure with respect to atmosphere. This design ensures the airflow within the PB directs any potential airborne contamination to the HEPA filters. One stage of HEPA filtration with a removal efficiency of 99% effectively reduces the LPF to 1E-02. (Ref. 1, Page 4-5, 4.4.3.3)

The PB ventilation system is credited to provide mitigation to the MEI for a fire burning CH waste in the CHGB and is, therefore, required at all times while CH waste is exposed. (Ref. 1, Page 4-7, 4.4.3.5)

The PB ventilation system is provided with pressure gauges that measure differential pressure across the HEPA filter stages (stage 3 and stage 4) and flow instruments that measure the flow rate for each of the three ventilation system trains. The differential pressure across each HEPA filter stage is operated at a minimum of 0.15 in. water column (wc) and a maximum of 6.0 in. wc to provide sufficient operational margin while ensuring the filters are maintained and operable to perform their safety function. (Ref. 1, Page 4-5, 4.4.3.3)

The confinement ventilation system is not credited for a seismic event.

Exhaust air is HEPA filtered at local processing areas to provide defense in depth worker protection. (Ref. 1, Page 3-29, 3.3.2.3.2)

Column 7 - "Performance Criteria"

The PB ventilation system performance criterion is that the system be operational during waste processing activities (operation mode) when CH waste is exposed in the GB or BBA. An operable PB ventilation system requires a minimum exhaust flow rate with the AHUs (supply air) in operation and the HEPA filters operable to filter the exhaust from the building. The exhaust flow rate and supply airflow rate is such that adequate margin exists for maintaining the safety function to ensure negative pressure within the PB with respect to environment. (Ref. 1, Page 4-6, 4.4.3.4)

Column 8 - "Compensatory Measures"

There are no compensatory measures. No vulnerabilities were identified which would prevent the MBVS from performing the confinement system safety function based its service description in the DSA.

Attachment 4 – Table 5-1 Ventilation System Performance Criteria

Evaluation Criteria		Safety Significant	Evaluation Criteria Met	Discussion	Reference
Ventilation System – General Criteria					
1. Pressure differential should be maintained between zones within the PB and atmosphere		Applies	Yes	PB ventilation consists of two 100% outside supply air systems and three parallel fan systems that exhaust building air through HEPA filter systems and discharge it to the atmosphere through the stack. Supply and exhaust air streams are adjusted to manage more potentially contaminated areas at lower ambient pressures with respect to less potentially contaminated areas and the atmosphere. Contamination zones are designated 1 through 4 with zones labeled 1 being the most potentially contaminated. (Ref. 1, page 2-56, 2.7.1) The PB CVS was designed to meet the intent of ERDA 76-21 which is the most immediate predecessor of DOE Handbook 1169-2003	Energy Research & Development Administration (ERDA 76-21) Nuclear Air Cleaning Handbook Chapter 2 ASHRAE Design Guide

Attachment 4 – Table 5-1 Ventilation System Performance Criteria (continued)

Evaluation Criteria		Safety Significant	Evaluation Criteria Met	Discussion	Reference
Ventilation System – General Criteria					
2. Materials of construction should be appropriate for normal, abnormal, and accident conditions		Applies	Yes	The TSR controls require the PB ventilation system to be operable in order to conduct GB or BBA operations (i.e., when CH waste is exposed in the GB or BBA). (Ref. 1, Page 4-7, 4.4.3.5) The PB ventilation system is credited to provide mitigation to the Maximally Exposed Individual (MEI) for a fire burning CH waste in the CHGB. (Ref. 1, Page 4-7, 4.4.3.5) The PB ventilation system is required to operate only during these two events. The PB ventilation system is designed to operate during these two events. Ductwork throughout the HVAC system is metal. (Ref. 3, Page 3-10, 3.6.2) Duct supplying 100% outside air is generally galvanized steel. Exhaust duct is generally stainless steel. Flexible connectors are generally Neoprene for local process blowers, EDPM for the MBV blowers, PTFE coated fiberglass for the GB/BBA exhaust blower B-213B, and PTFE for Blower B-202. The F-011, F-012, and F-013 HEPA filters are either UL 900, CL 1 or UL 586 Listed and rated for at least 180°F. (Ref. 1, page 4-7, 4.4.3.4) Ductwork supports are designed to withstand the DBA earthquake identified in the 1997 UBC for Seismic Zone 2A, Group H, Division 7 Occupancy (Ref. 1, Page 3-68, 3.4.2.11)	ERDA 76-21 Section 5.2.4 1997 Uniform Building Code

Attachment 4 – Table 5-1 Ventilation System Performance Criteria (continued)

Evaluation Criteria		Safety Significant	Evaluation Criteria Met	Discussion	Reference
Ventilation System – General Criteria					
3. Exhaust system should withstand anticipated normal, abnormal, and accident system conditions and maintain confinement integrity		Applies	Yes	The PB ventilation system is designed to operate during normal operations and during a CHGB fire as noted above in Item 2. The PB ventilation system is required to operate only during normal operations and a CHGB fire as noted above in Item 2. The PB ventilation system is not credited for maintaining confinement during any other conditions.	ERDA 76-21 Section 2.5

Attachment 4 – Table 5-1 Ventilation System Performance Criteria (continued)

Evaluation Criteria		Safety Significant	Evaluation Criteria Met	Discussion	Reference
Ventilation System – General Criteria					
4. Confinement Ventilation System (CVS) shall have appropriate filtration to minimize release.		Applies	Yes	Each of the three MBV parallel exhaust ventilation trains has a moisture separator, a 95% efficient prefilter, and two stages of HEPA filters in series. Each HEPA stage provides sufficient filtration to satisfy the safety function to filter the radionuclide particulate from the exhausted air. One stage of HEPA filtration with an insitu removal efficiency of 99% effectively reduces the LPF to 1E-02 as credited by the DSA. (Ref. 1, Page 4-6, 4.4.3.3) The above HEPA filters are manufacturer tested to verify a minimum of 99.97% efficiency on a nominal 0.3 micron diameter challenge aerosol and again retested at DOE's Filter Test Facility. Installed HEPA filters are tested in accordance with ANSI/ASME N510-1989. (Ref. 1, Page 5-6, 5.3.1) The HEPA filters are manufacturer rated for 2,200 cfm at 1 in. w.c. initial pressure drop. Differential pressure across each of the above HEPA stages is regularly monitored to insure operability. (Ref. 1, Page 4-6, 4.4.3.3) HEPA filter efficiency, differential pressure gauges, and exhaust flow instruments are verified periodically to ensure the exhaust ventilation system operates as designed. (Ref. 1, Page 5-9, 5.5.1.1.3) Hot Cell and Glove Box areas have at least one stage of non-credited HEPA filtration on the inlet to prevent blowback into the PB. These areas also have a single stage of non-credited HEPA filters installed on the exhaust prior to connection into the PB exhaust system. (Ref. 1, Page 2-55, 2.6.1.5)	ERDA 76-21 Section 2.6 ANSI/ASME N510-1989

Attachment 4 – Table 5-1 Ventilation System Performance Criteria (continued)

Evaluation Criteria		Safety Significant	Evaluation Criteria Met	Discussion	Reference
Ventilation System – General Criteria					
5. Provide system status instrumentation and/or alarms		Applies	Yes	The capability to monitor and control changing equipment functions is generally provided at the Human Machine Interface (HMI) computer. There are no required HMIs necessary for prevention or mitigation of potential accidents. Accordingly, instruments are not seismically qualified. (Ref. 1, Page 13-2, 13.4) The only instruments classified as Safety Significant are the Flow Elements (FE), Flow Indicating Transmitters (FIT) located at the inlets to Filter Housings F-011, F-012, and F-013 and the associated Pressure Differential Indicators (PDI) located at the Stage 3 and 4 HEPA filters. (Attachment 6, Page 7 , 4.1.2 and 4.2.1) Instruments and alarms are designed to function for the specified events credited (Normal Operations and a CHGB Fire)	ERDA 76-21 Section 5.6.7 ASHRAE Design Guide, Section 4
Alarm information provided below is listed here for convenience only and may not fully concur with controls executed in the field. HMI alarms are programmed as required to accommodate changing process conditions.					

Attachment 4 – Table 5-1 Ventilation System Performance Criteria (continued)

Description	Instrument	Low Alarm	High Alarm	Units	Discussion
5. System status instrumentation and/or alarms, Cont'd					
F-011, 012, 013 Flow	FIT-011, 012, 013	15,000	32,000	scfm	
F-011, 012, 013 Temp	TT-011, 012, 013	45	140	°F	
F-011, 012, 013 Differential Pressure	PDIT-011A, 012A, 013A	0.5	9.0	in. w.c.	
F-011, 012, 013 Relative Humidity	MT-011, 012, 013	5	80	%RH	
Glove Box Press wrt Rm 231	PDIT-212	2.0	3.0	in. w.c.	
F-213A Differential Press	PDIT-213A	0.02	2.5	in. w.c.	
F-213B1 Differential Press	PDIT-213B1	0.5	5.0	in. w.c.	
BBA Diff Press wrt Rm 231	PDIT-213C	0.3	1.0	in. w.c.	
BBA Outer Airlock Diff Press wrt Rm 231	PDIT-226	0.02	0.5	in. w.c.	
Hot Cell Diff Press wrt Rm 231	PIT-211C	1.2	1.8	in. w.c.	
F-211A Differential Press	PDIT-211A	0.1	3.0	in. w.c.	
F-211B1 Differential Press	PDIT-211B1	0.1	3.0	in. w.c.	
F-211B2 Differential Press	PDIT-211B2	0.1	3.0	in. w.c.	
F-211B3 Differential Press	PDIT-211B3	0.1	3.0	in. w.c.	

Attachment 4 – Table 5-1 Ventilation System Performance Criteria (continued)

Description	Instrument	Low Alarm	High Alarm	Units	Discussion
5. System status instrumentation and/or alarms, Cont'd					
A-211 Differential Press	PDIT-211D	0.2	1.5	in. w.c.	
F-202 Discharge Press	PT-202	(-)20.0	(-)5.0	in. w.c.	
H-202 Discharge Temp	TT-202D	NA	NA	°F	
F-231 Differential Press	PDIC-211	1.5	22.0	in. w.c.	
DH-06 Temp Control	TIC-06	40	180	°F	
AHU-004 & AHU-005 Inlet Relative Humidity	MI-004 & MI-005	0.0	90.0	%RH	
AHU-004 & AHU-005 Inlet Temperature	TI-004B & TI-005B	5	130	°F	
AHU-004 & AHU-005 Heater Leaving Air Temp	TIC-004A & TIC-005A	15	125	°F	
AHU-004 & AHU-005 Cooler Leaving Air Temp	TIC-004 & TI-005	5	130	°F	
AHU-004 & AHU-005 Discharge Temperature	TI-004C & TI-005C	15	110	°F	
AHU-004 & AHU-005 Filter Differential Pressure	PDI-004A & PDI-005A	0.2	2.0	in. w.c.	
AHU-004 & AHU-005 Fan Differential Pressure	PDA-004B & PDA-005B	0.5	NA	in. w.c.	

Attachment 4 – Table 5-1 Ventilation System Performance Criteria (continued)

Evaluation Criteria		Safety Significant	Evaluation Criteria Met	Discussion	Reference
6. Interlock supply and exhaust fans to prevent positive pressure differential.		Applies	Yes	Supply and exhaust fans are interlocked as required to prevent positive pressure differential. Flow Indicator FI-014 is programmed into the PB control system logic to total the flows from FIT-011, FIT-012, and FIT-013 and provides a HMI display of total exhaust air discharging from the stack. Its output shuts down supply air handling unit AHU-005 when total exhaust flow falls below 55,000 scfm and enables AHU-005 operation above 55,000 scfm. In addition, FI-014's output shuts down AHU-004 total exhaust flow below 40,000 scfm and enables its operation above 40,000 scfm.	ASHRAE Design Guide, Section 10
7. Post-accident indication of filter break-through		Applies	Yes	Differential pressure occurring across Filter Housings F-011, F-012, and F-013 Stage 3 and 4 HEPA filters is locally displayed by SS SSC gages PDI-011F and G, PDI-012F and G, and PDI-013F and G. These gages are located on the PB roof, outside of confinement, which allows easy access for post-accident surveillance of filter break-through. Gage indications are manually monitored and recorded on roundsheets regularly during the OPERATION Mode to insure differential pressure is between 0.15 and 6.0 in. w.c. During LCO, surveillance is performed in accordance with SR 4.1.1. Calibration is performed in accordance with SR 4.1.5. (Ref. 2, Section B ¾, 3-22)	ERDA 76-21 Section 5.6.7 ASHRAE Design Guide, Section 4

Attachment 4 – Table 5-1 Ventilation System Performance Criteria (continued)

Evaluation Criteria		Safety Significant	Evaluation Criteria Met	Discussion	Reference
8. Reliability of control system to maintain confinement function under normal, abnormal, and accident conditions		Applies	Yes	The PB ventilation control system is designed to operate during normal operations and during a CHGB fire as noted above in Item 2. The reliability of the control system to support ventilation system operation is required only during these two conditions. The PB ventilation system is not credited for maintaining confinement during any other conditions. The HEPA filters are maintained within differential pressure specifications that ensure their operability to maintain their safety function to filter the exhaust to remove radionuclide particulate during a CHGB fire and normal conditions. (Ref. 1, Page 4-7, 4.4.3.4) Surveillances provide assurance that operability is maintained, that instruments relied on for flow and pressure are calibrated and accurate. (Ref. 1, Page 4-7, 4.4.3.5)	ERDA 76-21 Section 5.6.7
9. Control components should fail safe		Applies	Yes	Systems components are designed to fail-safe upon loss of power. (Ref. 1, Attachment C PHA Table, HV-7(a)) Automatic dampers are designed to fail to the safe condition on loss of power. Supply air handling units shut down at predetermined decreases in exhaust flow to insure excess exhaust flow and building negative pressure is maintained.	ERDA 76-21 Section 5.3.1

Attachment 4 – Table 5-1 Ventilation System Performance Criteria (continued)

Evaluation Criteria		Safety Significant	Evaluation Criteria Met	Discussion	Reference
Resistance to Internal Events – Fire					
10. Confinement ventilation systems should withstand credible fire events and be available to operate and maintain confinement		Applies	Yes	The PB ventilation system is designed to operate and maintain confinement during normal operations and during a CHGB fire as noted above in Item 2. Should a fire occur in the Contact Handled Glovebox (CHGB), the PB ventilation system, including the presence of F-011, F-012, and F-013 HEPA filters, is required as an SS SSC to mitigate the dose consequences of the postulated fire in the CHGB. In addition to removing entrained moisture and soot, thermal protection of these HEPAs is provided by the Stage 1 and 2 prefilters. The HEPA filters could be exposed to a temperature increase of 74°F above normal operating temperatures, and therefore, are rated for at least 180°F. (Ref. 1, Page 4-7, Paragraph 4.4.3.4) The PB works in conjunction with the ventilation system to provide confinement. The ventilation system, credited HEPA filters, and PB reduce the event to acceptable consequences. (Ref. 1, Page 3-48, Paragraph 3.4.2.1.6) T-CM-FW-R-AD-002, Fire Hazards Analysis (FHA), (Ref. 6) assesses fire prevention and protection requirements and strategies for the TRU Waste Processing Center. A single stage of MBV HEPA filters in a single in-service HEPA train can withstand the entire soot loading from the design basis CHGB fire event. Additional system features provide significant protection of the MBV HEPA filters safety function. (T-CH-FW-R-AD-001, R1, Sections 1.1 and 3.)	ERDA 76-21 Section 2.5.2 DOE-STD-1066, Chapter 14 & Appendix B

Attachment 4 – Table 5-1 Ventilation System Performance Criteria (continued)

Evaluation Criteria		Safety Significant	Evaluation Criteria Met	Discussion	Reference
11. Confinement ventilation systems should not propagate spread of fire		Applies	Yes	The ventilation system is designed to minimize the spread of fire. Based on the processes and the materials in the PB and the once-through ventilation system, the risk of fire propagation through the ventilation system with the absence of dampers is very low. (Ref. 1, Page 2-59, Paragraph 2.7.2) Ductwork throughout the HVAC system is metal. (Ref. 6, Page 3-10, 3.6.2) Flexible connectors are generally Neoprene for local process blowers, EDPM for the MBV blowers, PTFE coated fiberglass for the GB/BBA exhaust Blower B-213B, and PTFE for Blower B-202. The F-011, F-012, and F-013 HEPA filters are either UL 900, CL 1 or UL 586 Listed and rated for at least 180°F. (Ref. 1, page 4-7, 4.4.3.4)	ERDA 76-21 Section 2.5.2 DOE-STD-1066, Chapter 14 & Appendix B
Resistance to External Events – Natural Phenomena – Seismic					
12. Confinement ventilation systems should safely withstand earthquakes		Applies	PB and CVS supports are seismic; CVS is not	The active CVS is not credited in a seismic accident. Ductwork supports are designed to withstand the DBA earthquake identified in the 1997 UBC for Seismic Zone 2A, Group H, Division 7 Occupancy (Ref. 1, Page 3-68, 3.4.2.11)	1997 Uniform Building Code
Resistance to External Events – Natural Phenomena – Tornado/Wind					
13. Confinement ventilation system should safely withstand tornado depressurization		Does not Apply	NA	Tornado events were not specifically analyzed since there is no tornado criteria established for PC-2 structures. However, the potential damage of a tornado would be bounded by the seismic evaluation. (Ref. 1, Page 3-28, 3.3.2.3)	DOE O420.1B, (Chapter IV); DOE-HDBK-1169 (9.2); DOE-STD-1023-95

Attachment 4 – Table 5-1 Ventilation System Performance Criteria (continued)

Evaluation Criteria		Safety Significant	Evaluation Criteria Met	Discussion	Reference
14. Confinement ventilation system should withstand design wind effects on system performance		Applies	PB and CVS supports are qualified; CVS is not	The ventilation system was not designed to withstand wind loads. The WPF is evaluated for sustained wind loads in accordance with the 1997 UBC. The applicable UBC wind design criteria is a 70-mph peak at 10-m height. The annual probability of exceedance is 2E-02. (Ref. 1, Page 1-12, 1.5.2)	DOE-HDBK-1169 (9.2) DOE-STD-1023-95
Other NP Events (e.g., flooding, precipitation)					
15. Confinement ventilation system should withstand other NP events considered credible in the DSA where the confinement ventilation system is credited		NA	NA	The confinement ventilation system is not credited for NP events. The passive building structure works in conjunction with an operable ventilation system (i.e., building walls provide confinement for differential pressure) and serves as a barrier to confine release of radioactive material. In the event of a loss of ventilation, the passive Process Building structure, though not specifically credited, reduces the overall facility Leakpath Factor (LPF). (Ref. 1, Page 4-2, 4.4.1.1)	DOE O420.1B DOE-HDBK-1169 (9.2)

Attachment 4 – Table 5-1 Ventilation System Performance Criteria (continued)

Evaluation Criteria		Safety Significant	Evaluation Criteria Met	Discussion	Reference
Range Fires/Dust Storms					
16. Administrative controls should be established to protect confinement ventilation systems from barrier threatening events		Applies	Yes	The Process Building is located in an open area and is not anticipated to be subjected to range fires or dust storms. There are no TSR level administrative controls that directly address protecting confinement barriers from range fires or dust storms. There are TSR level administrative controls for establishing safety management programs for operational safety, emergency preparedness, and hazardous material protection. (Ref. 2, Page 5-11, 5.6) MBVS ductwork is generally located above 8 foot and consequently is not subject to threat from floor traffic. Although there are no Specific Administrative Controls (SACs) associated with barriers protecting the confinement ventilation system, the Process Building serves as the final contamination control barrier for liquid and solid releases and subsequently serves as barrier for that part of the ventilation system located inside the building. (Ref. 1, Page 4-2, 4.4.1.2)	DOE O420.1B, (3.b)

Attachment 4 – Table 5-1 Ventilation System Performance Criteria (continued)

Evaluation Criteria		Safety Significant	Evaluation Criteria Met	Discussion	Reference
Testability					
17. Design supports the periodic inspection & testing of filters and housing, and tests and inspections are conducted periodically.		Applies	Yes	MBVS HEPA filter housings include ports for in place testing. HEPA filters are manufacturer tested to have a removal efficiency of 99.97% for particles 0.3 micron or greater. Installed F-011, F-012, and F-013 Stage 3 and 4 HEPA filters are periodically tested in-place in accordance with ANSI/ASME N510-1995. (Ref. 1, Page 4-6, 4.4.3.3)	DOE-HDBK-1169 (2.3.8)
18. Instrumentation required to support system operability is calibrated		Applies	Yes	Calibration of FIT-011, FIT-012, and FIT-013 is performed annually per Surveillance Requirement SR 4.1.6. (Ref. 10, Page 7, 6.2) Calibration of PDI-011F, PDI-011G, PDI-012F, PDI-012G, PDI-013F and PDI-013G is to be performed annually per Surveillance Requirement SR 4.1.5. (Ref. 10, Page 10, 6.3) Non-Safety instrumentation is calibrated as necessary to support system functionally.	DOE-HDBK-1169 (2.3.8)

Attachment 4 – Table 5-1 Ventilation System Performance Criteria (continued)

Evaluation Criteria		Safety Significant	Evaluation Criteria Met	Discussion	Reference
19. Integrated system performance testing is specified and performed		Applies	Yes	The facility has an initial testing, in-service surveillance, and maintenance program to ensure that the SSCs [includes Design Features (DFs) and DID SSCs] are ready to perform their intended functions. (Ref. 1, Page 5-18, 5.5.3.4) System design was demonstrated through flow balancing and testing. (Ref. 1, Page 4-6, 4.4.3.3) The Initial Testing, In-Service Surveillance and Maintenance program ensures that equipment meets design criteria and is properly installed, generates and maintains surveillance schedules, plans and maintains equipment. (Ref. 1, Page 10-1, 10.1) The initial testing, in-service surveillance, and maintenance program integrates work control processes, including the identification, request, planning, implementation of maintenance, and testing with engineering support, and required safety and technical reviews. Maintenance of SSCs relies on the development and use of work controls that have been properly documented, reviewed, and approved. The Program includes initial testing of new equipment and surveillance testing of the ventilation system filters following installation. (Ref. 1, Page 5-18, 5.5.3.4) T-CM-FW-A-EG-008, System Engineer Program Description, (Ref. 14) identifies additional testing and surveillance performed to insure system performance.	DOE-HDBK-1169 (2.3.8)
20. Filter service life program should be established		Applies	Yes	HEPAs are replaced as required to meet the test criteria, radiation criteria, or at a maximum service life of ten years from date of manufacture. (Ref. 10, Page 19, 3.4.4)	DOE-HDBK-1169 (2.3.8)

Attachment 4 – Table 5-1 Ventilation System Performance Criteria (continued)

Evaluation Criteria		Safety Significant	Evaluation Criteria Met	Discussion	Reference
Single Failure					
21. Failure of one component (equipment or control) shall not affect continuous operation		Does not apply	NA		DOE O420.1B, Facility Safety, Chapter I, Sec. 3.b(8)
22. Automatic backup electrical power shall be provided to all critical instruments and equipment required to operate and monitor the confinement ventilation system		Does not apply	NA		DOE-HDBK-1169 (2.2.7)

Attachment 4 – Table 5-1 Ventilation System Performance Criteria (continued)

Evaluation Criteria		Safety Significant	Evaluation Criteria Met	Discussion	Reference
23. Backup electrical power shall be provided to all critical instruments and equipment required to operate and monitor the confinement ventilation system		Applies	Yes	During a loss of electric power incident, any one of the MBVS process ventilation blowers is powered by the diesel generator to maintain PB differential pressures. (Ref. 1, Page 2-54, 2.6.1.5) This is a DID feature and is not credited as a safety feature in the DSA. SS Pressure Differential Indicators PDI -011F, PDI-011G, PDI -012F, PDI-012G, PDI -013F, and PDI-013G are battery operated. They are not credited as a safety feature in the DSA during loss of power although they continue to provide PDI indication of filter breakthrough when air is exhausted through them. SS Flow Indicating Transmitters FIT-011, FIT-012, and FIT-013 are not provided electrical backup power and are not credited as a safety feature in the DSA during loss of power.	DOE-HDBK-1169 (2.2.7)
24. Address any specific functional requirements for the confinement ventilation system (beyond the scope of those above) credited in the DSA		NA	NA	None	10 CFR 830, Subpart B

Attachment 5 – T-CM-FW-A-ME-001, R0, Main Building Ventilation System Description

Main Building Ventilation System Description

Implementation Date: 6/30/06

APPROVAL:

Design Manager

JUNE 29, 2006
Date

Contents

1.0 INTRODUCTION **4**
1.1 System Identification 4
1.2 Limitations of this SDD 4
1.3 Ownership of this SDD 4
1.4 Definitions/Glossary 4
1.5 Acronyms 6
2.0 GENERAL OVERVIEW **7**
2.1 System Functions 7
2.2 System Classification 7
2.3 Basic Operational Overview 7
3.0 REQUIREMENTS AND BASES **9**
3.1 General Requirements 9
3.2 Specific Requirements 13
3.3 Engineering Disciplinary Requirements 16
3.4 Testing and Maintenance Requirements 17
3.5 Other Requirements 19
4.0 SYSTEM DESCRIPTION **20**
4.1 Configuration Information 20
4.2 Operations 24
4.3 Testing and Maintenance 28
5.0 APPENDICES/ATTACHMENTS **29**
Appendix A: Source Documents 30
Appendix B: System Drawings and Lists 31
Appendix C: System Procedures 33
Attachment 1: TRU/Alpha Waste Treatment Project Main Building Ventilation System Overview 34

Revision Summary

Revision Purpose (overall)

Initial Issue

Specific Changes

Location	Description	Reason

1.0 INTRODUCTION

1.1 System Identification

The Process Building (PB) Main Building Ventilation System (MBVS) is part of the facility confinement. It maintains negative pressure within the PB while maintaining more potentially contaminated areas negative with respect to less potentially contaminated areas. (Appendix A, Item 1, page 5-7) Management of space pressures prevents migration of radioactive materials to outside atmosphere or to building areas of lesser contamination. The MBVS also provides High Efficiency Particulate Air (HEPA) filtration of exhaust air to minimize the release of radionuclide particulate emissions to the environment. (Appendix A, Item 1, page 5-7) See Attachment 1 for an overview diagram of the MBVS.

The system consists of supply Air Handling Units (AHUs), exhaust blowers, ductwork, dampers, filters, and controls which are either provided locally or integrated with the facility Programmable Logic Controller (PLC) based control system.

The MBVS supply is bounded by outside air intakes at the AHUs and grilles supplying air to local building areas. Conditioned filtered air from AHU-004 is supplied to the Breathing Air System Compressor. Damper ID2-45 provides the MBVS boundary.

The MBVS exhaust is bounded by local area exhaust grilles which remove air from building spaces and the building stack discharge to atmosphere. Exhaust air is filtered through nominal 99.97% efficient HEPAs and sampled for radionuclides before release to the environment. (Appendix A, Item 1, page 2-19)

Systems interfacing with the MBVS include the environmental chilled water system, breathing air system, process tanks, the Supernate Evaporator, Metso addition cabinet, isokinetic sampling cabinets, stack sampler, electrical power and control signals, instrument air, and the facility control system.

1.2 Limitations of this SDD

There are currently no limitations identified for this System Design Description (SDD).

1.3 Ownership of this SDD

The Cognizant System Engineer is the owner of this SDD.

1.4 Definitions/Glossary

Adsorber—A device for removing gases or vapors from air by means of preferential physical condensation and retention of molecules on a solid surface. Adsorbers used in nuclear applications are often impregnated with chemicals to increase their activity for organic radioactive iodine compounds. (Appendix A, Item 8)

As Low As Reasonably Achievable (ALARA)—The design philosophy used to determine the need for, or extent of, air cleaning and off-gas facilities, based on their cost effectiveness in reducing adverse impact with respect to offsite and onsite dose criteria. (Appendix A, Item 8)

Array—An array is the arrangement of internal components in a bank, expressed as the number of components across the width of a bank times the number high (e.g., a 4 by 3 array of HEPA filters). (Appendix A, Item 8)

Demister—A device designed to collect and divert moisture away from downstream filters (i.e., prefilters, HEPAs, and adsorbers). Demisters are installed in final filter plenums upstream of the first stage HEPA filters to prevent water damage to the filters. (Appendix A, Item 8)

Filter/Adsorber Bank—A parallel arrangement of filters/adsorbers on a common mounting frame installed within a single housing. (Appendix A, Item 4)

Final Filter—The last filter unit in a set of filters arranged in series. (Appendix A, Item 8)

High-Efficiency Particulate Air Filter or HEPA Filter—A throw-away extended-pleated-medium dry-type filter with: (1) a rigid casing enclosing the full depth of the pleats, (2) a minimum particle removal efficiency of 99.97% for particles with a diameter of 0.3 micrometers, and (3) a maximum pressure drop of 1.0 in. wg. or 1.3 in. wg. when clean and operated at its rated airflow capacity. (Appendix A, Item 8)

OPERATION MODE—A MODE in which all applicable Limiting Conditions for Operation (LCOs) for OPERATION have been met and the PROCESS AREA is performing or is capable of performing its intended function. The PROCESS AREA may process, transfer, handle, sample, package, and stage Contact Handled (CH) waste. (Appendix A, Item 2, page 1-4)

Prefilter—Prefilters are throwaway type filters that are located upstream of HEPA filters. Prefilters are intended to collect and hold the larger airborne particles that are in the passing airstream. Prefilters are sometimes called roughing filters. (Appendix A, Item 8)

Redundant Unit or System—An additional and independent unit or system, which is capable of achieving the objectives of the basic system and is brought online in the event of failure of the basic system. (Appendix A, Item 8)

Safety-Class Structures, Systems, and Components (SC SSCs)—Structures, systems, or components including portions of process systems, whose preventive and mitigative function is necessary to limit radioactive hazardous material exposure to the public, as determined from the safety analyses. (Appendix A, Item 8)

Safety-Significant Structures, Systems, and Components (SS SSCs)—Structures, systems, and components which are not designed as SC SSCs but whose preventive or mitigative function is a major contributor to defense in depth and/or worker safety as determined from safety analyses. (Appendix A, Item 8)

STANDBY MODE—A MODE in which only UNEXPOSED waste may be present within the Contact Handled Glove Box (CHGB). Activities may include the handling of UNEXPOSED waste, generated items such as personal protection equipment, swabs, and swipes which can be collected, handled, packed, and removed from the facility. (Appendix A, Item 2, page 1-4)

Train—A set of components arranged in series. (Appendix A, Item 8)

1.5 Acronyms

AHU	Air Handling Unit
ALARA	As Low As Reasonably Achievable
BBA	Box Breakdown Area
CH	Contact Handled
CHGB	Contact Handled Glove Box (includes glove box and BBA)
HEPA	High Efficiency Particulate Air
HMI	Human Machine Interface
LCO	Limiting Condition for Operation
MBV	Main Building Ventilation
MBVS	Main Building Ventilation System
MCC	Motor Control Centers
MEI	Maximally Exposed Individual
PB	Process Building
PLC	Programmable Logic Controller
POG	Process Off Gases
scfm	standard cubic feet of air per minute
SDD	System Design Description
SC SSC	Safety-Class Structure(s), System(s), and Component(s)
SR	Surveillance Requirement
SS SSC	Safety-Significant Structure(s), System(s), and Component(s)
TAB	Testing and Balancing
TSR	Technical Safety Requirement
UBC	Uniform Building Code
wrt	with respect to

2.0 GENERAL OVERVIEW

2.1 System Functions

The Main Building Ventilation (MBV) protects onsite and offsite personnel from radiological hazards by the following actions.

A. Filters exhaust air through nominal 99.97% efficient HEPA filters (Appendix A, Item 1, page 2-56) before releasing it to the environment through the building stack.

B. Provides confinement by maintaining a negative pressure within the PB while maintaining potentially contaminated process areas more negative than other building areas. (Appendix A, Item 1, page 3-31)

C. Provides mitigation to the Maximally Exposed Individual (MEI) in the event of a fire in the CHGB. (Appendix A, Item 1, page 4-7)

D. Exhausts and filters air at local processing areas to provide defense in depth worker protection. (Appendix A, Item 1, page 3-28)

In addition to confinement related functions associated with the exhaust system, AHU-004 and AHU-005 supply clean, filtered, conditioned air to the PB for personnel comfort.

See Attachment 1 for a system diagram overview of the MBVS.

2.2 System Classification

The PB ventilation system is an active system designated as a SS SSC in Section 4.4.3 of Appendix A, Item 1, and is subject to the Technical Safety Requirements (TSR). (Appendix A, Item 2) The remainder of the system is standard commercial quality. See Appendix A, Item 7 for a detailed identification of safety significant components.

2.3 Basic Operational Overview

AHU-004 and AHU-005 provide 100% outside supply air to the PB. They are each equipped with demisters, inlet dampers, 30% efficient pre-filters, 85% efficient bag filters, electric heaters, chilled water cooling coils and supply air fans. These AHUs are constant speed; however, air flow capacity may be either increased or decreased by changing the fan drives. All air is exhausted through Filter Housings F-011, F-012, and F-013 which each have moisture separators and pre-filters followed by two stages of nominal 99.97% efficient HEPA filters in series.

Blowers B-011, B-012, and B-013 maintain the PB at a negative ambient air pressure with respect to outside by exhausting a minimum of 15,000 scfm more air than supplied by AHU-004 and AHU-005 during the OPERATION Mode.

Booster fans located in the system perform the following functions:

Blower B-202 – Exhausts Process Off Gases (POG) from the Supernate Evaporator through H-202 and Filter Housing F-202 before discharge into the main exhaust duct. B-202 is also used to draw bypass air from the main exhaust duct through H-202 for reheat and relative humidity control of the exhaust air delivered to the F-011, F-012, and F-013 HEPAs.

Blower B-211A – Supplies air through Filter Housing F-211A into the Hot Cell

Blower B-211B – Exhausts air from the Hot Cell, through Filter Housings F-211B and A-211, into the main exhaust duct

Blower B-213A – Supplies air through Filter Housing F-213A into the Box Breakdown Area (BBA)

Blower B-213B – Exhausts air from the glove box and BBA, through Filter Housing F-213B, into the main exhaust duct

Blower B-124 – Exhausts air from the EL 770 Supernate Sampling Stations into the main exhaust duct

Blower B-323 – Exhausts air from the EL 805 Sludge Sampling Stations into the main exhaust duct

These booster fans are constant speed; however, air flow capacity may be either increased or decreased by changing their respective drive or adjusting adjacent in-line dampers.

The MBVS is balanced such that air flows from areas of less contamination potential into areas of greater contamination potential. See the system air Test and Balance (TAB) Analysis Reports listed as references in Appendix B.

Supply air systems to the BBA and Hot Cell are taken from the AHU-004 and AHU-005 supply and are each provided with a booster fan and HEPA filter system to maintain contamination confinement should back flow occur during blower shutdown. Air from Room 231 may be drawn into the glove box through HEPA filters located strategically along its perimeter.

Exhaust air from the glove box, BBA, and Hot Cell is HEPA filtered locally before entering the main exhaust duct. Exhaust air is then again filtered by two stages of HEPA filters, arranged in series, when it passes through Filter Housings F-011, F-012, and F-013.

Blowers B-011, B-012, and B-013, located just downstream of F-011, F-012, and F-013, provide the motive force for exhausting air from the PB and discharging it from the stack into the atmosphere.

The MBVS is designed such that any two of these exhaust filtration/blower systems have sufficient capacity to filter and exhaust the 55,000 scfm required for the OPERATION Mode, leaving one train available for back-up or maintenance activities. In addition, Blowers B-011, B-012, and B-013 are equipped with variable speed drives which provide the flexibility to operate all three trains at partial capacity simultaneously.

3.0 REQUIREMENTS AND BASES

3.1 General Requirements

3.1.1 System Functional Requirements

The MBVS is intended to perform its function at all times, but is required only in the OPERATION Mode. (See Definitions/Glossary for a description of the OPERATION Mode.) (Appendix A, Item 1, pages 4-6 and 5-8; Appendix A, Item 2, page 1-5)

Requirement: Confine radiological material by maintaining the PB at a pressure negative with respect to outside. (Appendix A, Item 1, pages 2-53, 4-5, and 5-7)

Basis: The motive force for air infiltration or exfiltration through building envelop cracks and openings is the differential pressure occurring across the building shell. Ambient space pressure within the PB is generally maintained at negative 0.1 in. w.c. nominal with respect to the outside environment to insure air infiltrates into the PB and to prevent exfiltration of potentially contaminated air. (Appendix A, Item 4, page 15) Note that temporary fluctuations (typically less than 30 minutes duration) associated with opening or closing doors and switching exhaust blowers is acceptable.

Requirement: Maintain areas of higher contamination potential at a pressure negative with respect to areas of lesser contamination potential. (Appendix A, Item 1, pages 2-53 and 5-7)

Basis: The motive force for air movement within the building is differential pressure. Maintaining higher contamination potential area pressures negative with respect to lesser contamination potential areas insures air movement toward and subsequent confinement of radiological particles within the higher contamination potential area. (Appendix A, Item 4, page 15)

Requirement: Provide nominal 99.97% HEPA filtration of the exhaust system. (Appendix A, Item 1, pages 2-55 and 5-7)

Basis: The exhaust air stream passes through two banks of HEPA filters in series before exiting the stack into the atmosphere. The F-011, F-012, and F-013 Stage 3 and 4 HEPAs provide primary control for reducing particulate and radionuclide emissions. Because the size of radionuclide particles are so small compared to other particles it is essential that HEPA filtration is used to maintain emissions ALARA. (Appendix A, Item 4, page 2 and Item 5, page 29)

Requirement: Differential pressure across each in-service Stage 3 and Stage 4 MBVS HEPA bank shall be greater than or equal to 0.15 in. w.c. but less than or equal to 6.0 in. w.c. (Appendix A, Item 1, page 5-8 and Item 2, page 3/4 1-1)

Basis: Manufacturers' ratings for the HEPAs used are nominally 1.0 in. w.c. differential at 2,200 cfm for a clean filter and up to 3.0 in. w.c. for a dirty filter. In addition, the manufacturer has tested representative HEPAs to insure integrity up to 6.0 in. w.c. (Appendix A, Item 6) The greater than or equal to 0.15 in. w.c. lower differential pressure limit insures the HEPAs are not breached; whereas, the less than or equal to 6.0 in. w.c. upper differential pressure limit insures the HEPAs will not overload to failure.

Requirement: The PB MBVS shall be OPERABLE. To be OPERABLE, a MBVS minimum exhaust air flow rate of 55,000 scfm shall be maintained differential pressure across each in-service Stage 3 and 4 HEPA filter bank shall be between 0.15 and 6.0 in. w.c. and both AHUs shall be operating. (Appendix A, Item 1, page 5-8 and Item 2, page 3/4 1-1)

Basis: To effectively control building pressures and capture airborne particles, system airflow must be maintained. A total exhaust airflow of 55,000 scfm accompanied by the two AHUs supplying 40,000 scfm total provides acceptable space pressures and contaminant control. (Appendix A, Item 2, page 3/4 3-11)

3.1.2 Subsystem and Major Components

The Room 231, Supernate Evaporator, Hot Cell, glove box and BBA exhaust systems provide defense in depth by filtering exhaust air locally. (Appendix A, Item 1, page 3-28) Local filtration of exhaust air minimizes the spread of contamination into the main exhaust duct.

Most of the Room 231 exhaust air is filtered locally by Filter Housing F-231 before entering the main exhaust duct. F-231 houses prefilters followed by a single stage of HEPA filters. The HEPA filters provide confinement of contamination should back flow occur during blower shutdown. F-231 is located in the northeast corner of Room 231.

Filter Housing F-202 provides local filtration of POG from the Supernate Evaporator. It contains moisture separators, 30% pre-filters, 90% pre-filters, and HEPAs in series. F-202 is located at the North wall inside Room 327. POG are drawn through F-202 by Blower B-202 before being discharged into the main exhaust duct.

Blower B-211A draws air from the AHU-005 supply and delivers it through Filter Housing F-211A to the Hot Cell. Filter Housing F-211A contains a single stage of HEPA filters for confinement of contamination should back flow occur during blower shutdown. Blower B-211A and Filter Housing F-211A are located in the Elevation 805 Room 321 Hot Cell Maintenance Area.

Hot Cell exhaust air is filtered locally by Filter Housing F-211B, which houses three separate trains of single stage HEPA filters. F-211B is located at the North wall inside the Hot Cell. Hot Cell exhaust air is then drawn through Charcoal Adsorber Housing A-211 by Blower B-211B before being discharged into the main exhaust duct. Blower B-211B and Adsorber Housing A-211 are located in the North Stair Tower.

Blower B-213A draws air from the AHU-004 supply and delivers it through Filter Housing F-213A to the BBA if required. Filter Housing F-213A contains a single stage HEPA filter for confinement of contamination should back flow occur during blower shutdown. Blower B-213A and Filter Housing F-213A are located in Room 231, just southwest of the BBA.

Filter Housing F-213B provides local filtration of exhaust air for both the glove box and the BBA. It contains two separate trains each housing a moisture separator, 95% pre-filter, HEPA and charcoal adsorber in series. F-213B is located inside the BBA. Air is exhausted from the glove box and BBA by Blower B-213B and discharged into the main exhaust duct. Blower B-213B is located in Room 231 above the Room 224 BBA Airlock.

3.1.3 Boundaries and Interfaces

The MBVS supply is bounded by the AHU-004 and AHU-005 outside air inlets and the supply grilles located at the point air is distributed to each area. Automatic inlet air dampers included with each AHU fail closed on loss of power providing a boundary between the system and outside environment.

The MBVS exhaust is bounded by local area exhaust grilles which remove air from building spaces and the building stack discharge to atmosphere. The Stage 4 HEPA filters located in F-011, F-012, and F-013 provide the final contamination confinement boundary between the system and outside environment.

Systems interfacing with the MBVS include the environmental chilled water system, breathing air system, process tanks, the Supernate Evaporator, Metso addition cabinet, isokinetic sampling cabinets, stack sampler, electrical power and control signals, instrument air, and the facility control system.

The Environmental Chilled Water System provides chilled water to AHU-004 and AHU-005 cooling coils for conditioning supply air to the PB. There is no mixing of the chilled water with the supply air. The only possibility of cross-contamination between the chilled water and the supply air would occur if the pressurized chilled water developed a leak at the cooling coil.

Conditioned filtered air from AHU-004 is supplied to the Breathing Air Compressor to lessen the potential of contaminating the Breathing Air System should the Room 231 area become contaminated.

The process tanks, Supernate Evaporator, Metso addition and sampling cabinets are normally vented through the MBVS exhaust to capture fugitive contaminants at the HEPAs.

Electrical power, control signals, and instrument air are separate from and do not normally penetrate the MBVS process air flow. Consequently these support systems are not normally subject to contamination from the potentially contaminated exhaust air stream. Appendix A, Item 7 provides detailed identification of boundaries and safety components associated with the MBVS.

Electrical power for the MBVS is generally provided from Motor Control Centers (MCC) located in the Electrical Equipment Building. MCCs serving the MBVS include MCC-1 (T-CM-FW-D-EE-003) and MCC-4 (T-CM-FW-D-EE-006). Control power and small loads may be powered from 120V power distribution panels.

Power for any one of the MBVS Blowers B-011, B-012, B-013, and either of the plant air compressors is provided by the standby diesel generator in the event that the electric power supply is interrupted. (Appendix A, Item 1, pages 2-53 and 2-55) Blower B-202 is also powered from the standby diesel generator if the normal electric power supply is interrupted.

3.1.4 Codes, Standards, and Regulations (Appendix A, Item 1, page 2-65)

ACGIH Industrial Ventilation – 23rd Ed., 1998
ASHRAE HVAC Design Guide for DOE Nuclear Facilities, 1993
ASHRAE Standard 62-99 Ventilation for Acceptable Indoor Air Quality, 1999
ASME N510 – 1989 Testing of Nuclear Air-Cleaning Systems, 1989
ERDA 76-21 Nuclear Air Cleaning Handbook Design, 1979 Printing
SMACNA Standards (Current to 1999)

3.1.5 Operability

MBVS normal system operating configuration is identified as maintaining sufficiently low PB absolute pressure by exhausting at least 55,000 scfm with the two supply AHUs operating, while maintaining differential pressure across each in-service Stage 3 and 4 HEPA between 0.15 and 6.0 in. w.c. (Appendix A, Item 1, page 4-6; Item 2, pages 3/4 1-1 and B3/4 3-11)

A normal "Operating" exhaust air flow of 55,000 scfm can be maintained with all three or any two of three exhaust Blowers B-011, B-012, and B-013 operating. See Section 4.2.4 for operation at off-normal conditions.

3.2 Specific Requirements

3.2.1 Radiation and Other Hazards

The PB is a Hazard Category 2 facility (Appendix A, Item 1, page 1-1). Contamination limits are identified in T-CM-FW-P-RP-322, Contamination Control.

MBVS functional requirements are identified in Section 3.1.1.

3.2.2 ALARA

ALARA is a design and operational goal of the MBVS. Materials of construction and accessibility consistent with ALARA principles are incorporated into the system.

3.2.3 Nuclear Criticality Safety

There are no credible Nuclear Criticality events associated with the MBVS.

3.2.4 Industrial Hazards

Applicable guards and clearances are used on MBVS components to minimize safety hazards.

3.2.5 Operating Environment and Natural Phenomena

Ambient and process conditions consistent with T-CM-FW-A-EG-001, Design Criteria Package, are specified for the MBVS.

Relative humidity control by cooling supply air and/or reheating exhaust air using either Duct Heater DH-06 or Heater H-202, protects the F-011, F-012, and F-013 HEPAs. DH-06 leaving air temperature controller, TIC-06, is managed through the PLC using input from Moisture Transmitters MT-011, MT-012, and MT-013 to control the relative humidity of air entering the F-011, F-012, and F-013 HEPA filters. Heater H-202 leaving air temperature setpoint is programmed into the control system using the Human Machine Interface (HMI). Alarms are provided with independent redundant devices.

The MBVS is credited to provide mitigation to the MEI for a fire burning CH waste in the CHGB and is, therefore, required at all times while CH waste is exposed. (Appendix A, Item 1, page 4-7)

To insure system operability, supports for the MBVS are seismically designed in accordance with the Uniform Building Code (UBC). Analysis of supports located external to the PB also considered a 20 psf snow load and a 70 mph wind load in accordance with the UBC.

Filter Housings F-011, F-012, and F-013 are also designed to resist a 20 psf snow load and a 70 mph wind load. In addition, the Flanders BG housing series is qualified generically in accordance with Flanders Report "Seismic Qualification Report for BF and BG Series Filter Housing Assemblies, Revision 1." (See T-CM-43-C-ME-002)

3.2.6 Human Interface Requirements

MBVS equipment is posted for noise control where applicable. Accessibility for maintenance was considered in the design and layout. The capability to monitor and control changing equipment functions is generally provided at the HMI.

Flow Indicator FI-014 is programmed into the PB control system logic to total the flows from FIT-011, FIT-012, and FIT-013 and provides a HMI display of total exhaust air discharging from the stack. Its output signals shutdown of AHU-005 when total exhaust flow falls below 55,000 scfm and enables AHU-005 operation above 55,000 scfm. In addition, FI-014's output signals shutdown of AHU-004 for total exhaust flow below 40,000 scfm and enables its operation above 40,000 scfm. During LCOs, surveillance is performed in accordance with Surveillance Requirement (SR) 4.1.2. Calibration of FIT-011, FIT-012, and FIT-013 is performed in accordance with SR 4.1.6.

Differential pressure occurring across F-011, F-012, and F-013 Stage 3 and 4 HEPA filters is displayed by SS SSC gauges PDI-011F and G, PDI-012F and G, and PDI-013F and G. Gauge indications are manually monitored and recorded on the roundsheets regularly during the OPERATION Mode to insure differential pressure is between 0.15 and 6.0 in. w.c. During LCO, surveillance is performed in accordance with SR 4.1.1. Calibration is performed in accordance with SR 4.1.5.

Alarm information provided below is listed here for convenience only and may not fully agree with controls executed in the field. Alarms are programmed as required to accommodate changing process conditions.

The following instruments provide a visual and audible alarm at the operator's station both below the low and above the high set points.

Description	Instrument	Low Alarm	High Alarm	Units
F-011, 012, 013 Flow	FIT-011, 012, 013	15,000	32,000	scfm
F-011, 012, 013 Temp	TT-011, 012, 013	45	140	°F
F-011, 012, 013 Differential Pressure	PDIT-011A, 012A, 013A	0.5	9.0	in. w.c.
F-011, 012, 013 Relative Humidity	MT-011, 012, 013	NA	80	%RH
Glove Box Press wrt Rm 231	PDIT-212	(-) 2.0	(-) 3.0	in. w.c.
F-213A Differential Press	PDIT-213A	0.02	2.5	in. w.c.
F-213B1 Differential Press	PDIT-213B1	0.5	5.0	in. w.c.
F-213B2 Differential Press	PDIT-213B2	0.5	5.0	in. w.c.
BBA Diff Press wrt Rm 231	PDIT-213C	(-) 0.3	(-) 1.0	in. w.c.
BBA Outer Airlock Diff Press wrt Rm 231	PDIT-226	0.02	0.5	in. w.c.
Hot Cell Diff Press wrt Rm 231	PIT-211C	(-) 1.2	(-) 1.8	in. w.c.
F-211A Differential Press	PDIT-211A	0.1	3.0	in. w.c.
F-211B1 Differential Press	PDIT-211B1	0.1	3.0	in. w.c.
F-211B2 Differential Press	PDIT-211B2	0.1	3.0	in. w.c.
F-211B3 Differential Press	PDIT-211B3	0.1	3.0	in. w.c.
A-211 Differential Press	PDIT-211D	0.2	1.5	in. w.c.
F-202 Discharge Press	PT-202	(-) 20.0	(-) 5.0	in. w.c.
F-231 Differential Press	PDIC-211	1.5	22.0	in. w.c.
DH-06 Temp Control	TIC-06	40	180	°F
AHU-004 & AHU-005 Inlet Relative Humidity	MI-004 & MI-005	NA	90	%RH
AHU-004 & AHU-005 Inlet Temperature	TI-004B & TI-005B	5	130	°F
AHU-004 & AHU-005 Heater Leaving Air Temp	TIC-004A & TIC-005A	15	125	°F
AHU-004 & AHU-005 Cooler Leaving Air Temp	TIC-004 & TI-005	5	130	°F
AHU-004 & AHU-005 Discharge Temperature	TI-004C & TI-005C	15	110	°F
AHU-004 & AHU-005 Filter Differential Pressure	PDI-004A & PDI-005A	0.2	2.0	in. w.c.
AHU-004 & AHU-005 Fan Differential Pressure	PDA-004B & PDA-005B	Switch		On/Off

3.2.7 Specific Commitments

There are no specific commitments associated with the MBVS other than those addressed in the TSR. (Appendix A, Item 2)

3.3 Engineering Disciplinary Requirements

3.3.1 Civil and Structural

MBVS duct supports meet the seismic criteria of Section 1632 of the Uniform Building Code for Seismic Zone 2A.

3.3.2 Mechanical and Materials

Exhaust duct and other exhaust components upstream of the F-011, F-012, and F-013 HEPA filters are generally constructed from stainless steel. Duct and other components downstream of the F-011, F-012, and F-013 HEPA filters are generally constructed from carbon steel.

Supply duct and other supply components are generally constructed from galvanized carbon steel.

3.3.3 Chemical and Process

The use of stainless steel components for exhaust duct upstream of the F-011, F-012, and F-013 HEPA filters provides superior corrosion resistance and ease of decontamination.

The F-011, F-012, and F-013 HEPA filters are constructed using an aluminum frame and wet laid fiberglass media. Although the overall effect of chemicals captured by the HEPAs is believed to be inconsequential, T-CM-105-R-ME-003, Evaluation of Filtration Group #75152 Main Building Ventilation HEPAs for Use with Fire Agent FM-200, reports the effect of trace amounts of hydrofluoric acid to be inconsequential.

The HEPAs are capable of operating at a differential pressure up to 6.0 in. w.c. (Appendix A, Item 1, page 4-6 and T-CM-105-R-ME-002, Overpressure Test Report for HV HEPA Filters) and a temperature of 180°F. (Appendix A, Item 1, page 4-7)

3.3.4 Electrical Power

MBVS equipment is served by 480v/3ph/60hz power as discussed in Section 3.1.3.

3.3.5 Instrumentation and Control

The MBVS is controlled by a combination of manual, pneumatic, and electronic devices. Components are designed to fail to the safe condition.

3.3.6 Computer Hardware and Software

PLCs monitor and control most MBVS equipment. The PB control system is comprised of four PLCs. These PLCs communicate to Operator workstations located in either the Control Building (7880D) or at the control point in the Personnel Building (7880B, Room 531). The primary operator station commonly referred to as OPS1 logs all

historical and alarm data.

Operator workstations consist of a HMI which includes a monitor depicting graphics and operational status of MBVS components. Wonderware WindowViewer software is used as the operator interface language.

See T-CM-72-M-OP-001, Control System Operations Manual, for a more complete description of the PB control system.

PLC and HMI operations, including monitoring for unauthorized modifications are in accordance with T-CM-FW-P-OP-011, Programmable Logic Controller and Human Machine Interface Operations.

3.3.7 Fire Protection

Although there are no fire protection SS SSCs specifically associated with the MBVS, the MBVS, including the F-011, F-012, and F-013 HEPA filters, is required as a SS SSC to mitigate the dose consequences of the postulated glove box fire (Appendix A, Item 1, page 3-47).

An evaluation of the effects a glove box fire would have on the F-011, F-012, and F-013 HEPA filters is included in T-CH-FW-R-AD-001, Glove Box Design Basis Fire Impacts Analysis on Main Building Ventilation HEPA Trains. The evaluation assesses the impacts of soot loading, air temperatures, and differential pressure across the HEPAs.

The F-011, F-012, and F-013 HEPA filters are either UL 900, CL 1 or UL 586 Listed and rated for at least 180°F. (Appendix A, Item 1, page 4-7) Other components are specified to an industry standard, when available.

3.4 Testing and Maintenance Requirements

3.4.1 Testability

Test ports are provided at desired locations in the duct and filter housings to enable flow, HEPA filter efficiency, and pressure testing. The HMI operator station provides the capability to energize and deenergize MBVS components. In addition, the speed of Blowers B-202, B-011, B-012, and B-013 may be controlled manually through the HMI.

3.4.2 TSR-Required Surveillances

The following SRs are listed here for convenience only and may not fully agree with the controlling document. Consult the applicable reference document listed in Appendix A for requirements.

SR 4.1.1 – Filter Housings F-011, F-012, and F-013, Stages 3 and 4 HEPA differential pressure (Appendix A, Item 2, page 3/4 1-5)

SR 4.1.2 – Minimum combined exhaust flow rate through F-011, F-012, and F-013 of 55,000 scfm (Appendix A, Item 2, 3/4 1-5)

SR 4.1.3 –AHU-004 and AHU-005 are operating (Appendix A, Item 2, page 3/4 1-5)

SR 4.1.4 – Test F-011, F-012, F-013, Stages 3 and 4 HEPA filter efficiency on 18 month intervals (Appendix A, Item 2, pages 3/4 1-5 and B3/4 3-24)

SR 4.1.5 – Annually calibrate F-011, F-012, and F-013 Stages 3 and 4 HEPA differential pressure gauges (PDI-011F and G, PDI-012F and G, and PDI-013F and G) (Appendix A, Item 2, page 3/4 1-5)

SR 4.1.6 – Annually calibrate the exhaust flow rate measurements (as generated by FE-011, FE-012, and FE-013) (Appendix A, Item 2, page 3/4 1-5)

3.4.3 Non-TSR Inspections and Testing

Routine surveillance is performed in accordance with T-CM-FW-X-OP-006, WPF CH Round Sheets, when in the OPERATION Mode.

An annual verification of damper position is performed. T-CM-FW-R-ME-001, HVAC Supply & Exhaust Damper Position Verification, includes the August 23, 2005 report.

3.4.4 Maintenance

The following plans, procedures, and work instruction are used to plan and perform maintenance:

(1) T-CM-FW-A-MT-001, Reliability Assurance Program Description

(2) T-CM-FW-A-MT-002, Preventive Maintenance Plan

(3) T-CM-FW-A-MT-003, Corrective Maintenance Plan

(4) T-CM-FW-P-MT-506, Main Building Ventilation System Preventive Maintenance

(5) T-CH-FW-P-MT-401, Hot Cell and BBA Supply and Exhaust Blowers Preventive Maintenance

(6) T-CM-FW-I-MT-002, Rotating Equipment Preventive Maintenance Work Instruction

These procedures detail specific preventive maintenance techniques which include both conditioned based and reliability-centered maintenance, allowing the planning of corrective maintenance in advance.

Conditioned based maintenance includes vibration analysis, oil analysis, temperature monitoring, thermal imaging, and ultrasonic frequency analysis which are used to predict the need to correct problems such as failing bearings, poor lubrication, misalignment, or improper balance. Reliability-centered maintenance includes scheduled periodic visual checks and inspection.

Calibration of SS SSC inlet flow transmitters (FIT-011, FIT-012, and FIT-013) and HEPA filter pressure differential indicators (PDI-011F and G, PDI-012F and G, PDI-013F and G) are performed on a regularly scheduled basis.

F-011, F-012, and F-013 Stage 3 and 4 HEPA filter efficiencies are verified by in-place testing on a regular basis. HEPAs are replaced as required to meet the test criteria or at a maximum service life of ten years from date of manufacture.

Idle equipment is maintained in accordance with T-CM-FW-P-MT-001, Preventive Maintenance of Idle Equipment.

3.5 Other Requirements

3.5.1 Security and SNM Protection

There are no requirements for security or Special Nuclear Materials (SNM) protection associated with the MBVS.

3.5.2 Special Installation Requirements

Maintain adequate clearance for installing filters into Filter Housings F-011, F-012, and F-013.

Sealants generally providing a 3 hour fire rating are applied at ductwork penetrations through building walls and floors. See T-CM-FW-W-SC-001, Penetration Schedule, for a listing of duct penetrations and fill material details.

3.5.3 Reliability, Availability, and Preferred Failure Modes

Reliability is assured by adhering to the documents cited in Section 3.4.4.

The MBVS includes three separate parallel filtration/blower sub-systems which discharge exhaust air from the PB through the stack to the atmosphere. Each sub-system is designed to filter and exhaust 50% of the stack flow to insure 100% system design capacity with one sub-system out of service.

Standard commercial equipment was specified where practical to minimize procurement time for replacement equipment. Spare parts and equipment are stored on site for many components.

3.5.4 Quality Assurance

Applicable elements and related implementing procedures of T-CM-FW-A-QP-001, Quality Assurance Program Description, provide control of design, procurement, installation, and operation quality. Configuration control of these functions is assured by formal work processes and records management practices included in T-CM-FW-A-AD-011, Configuration Management Program.

3.5.5 Miscellaneous Requirements

This section is not applicable.

4.0 SYSTEM DESCRIPTION

4.1 Configuration Information

4.1.1 Description of System, Subsystems, and Major Components

Attachment 1 provides a simple one sheet diagram of the MBVS major components. Piping and Instrumentation Diagrams identified below illustrate system components in more detail and illustrate functional relationships among those components.

T-CM-FW-D-PR-034, Sheets 1 & 2	AHU-004 Process Building
T-CM-FW-D-PR-035	AHU-004 Process Building
T-CM-FW-D-PR-036, Sheets 1 & 2	AHU-005 Process Building
T-CM-FW-D-PR-037, Sheets 1 & 2	Stack, Blowers and HEPA Units
T-CM-FW-D-PR-038	HVAC Supply – AHU-004 & AHU-005

Process Flow Diagrams T-CM-FW-D-ME-202 through 205 provide design flows identified prior to TAB activities. Flow adjustments may require change during TAB activities to achieve area pressure relationships.

MBVS Safety Significant Components are identified in T-CM-FW-A-EG-004, Safety Significant Structures, Systems and Components.

Discharge ductwork and components downstream of Filter Housings F-011, F-012, and F-013, including the stack, are not safety significant.

4.1.2 Boundaries and Interfaces

Mechanical Boundary Locations:

Process tanks – Boundary is at the vent flange
Supernate Evaporator – Boundary is at the SEP-504 vent flange
Metso addition cabinet – Boundary is at the vent flange
Isokinetic sampling cabinets – Boundary is at the vent flange
System supports – Boundary is at the outside duct surface
Breathing Air System Compressor – Boundary is on the downstream side of Damper ID2-45

Electrical Boundaries

Power – Boundary is at MBVS component terminal point
Control – Boundary is at MBVS component terminal point
Facility HMI – Boundary is at MBVS component terminal point

Instrument Air Boundaries

Power – Boundary is at MBVS component terminal point
Control – Boundary is at MBVS component terminal point

Environmental Boundaries

The supply air boundary with the outside environment occurs at the outside air intake to AHU-004 and AHU-005. Backflow of air through supply AHU intakes is prevented by having the inlet dampers fail closed in the event of power loss.

The Stage 4 HEPA filters located in F-011, F-012, and F-013 provide the final contamination confinement boundary between the system and outside environment.

Emissions to the atmosphere from the MBVS exhaust air stack are sampled in accordance with T-CM-FW-P-RP-309, Environmental Permits – Inspections/Monitoring and Reporting.

4.1.3 Physical Layout and Location

See Section 4.1.1 and construction drawings identified in Appendix B for equipment location.

4.1.4 Principles of Operation

PB exhaust airflow and resulting negative pressure is provided by Blowers B-011, B-012, and B-013.

Exhaust air is HEPA filtered through Filter Housings F-011, F-012, and F-013 just before entering the associated blower.

Air exhausted from Room 231, the Supernate Evaporator, glove box, BBA, and Hot Cell is filtered locally before entering the MBVS exhaust ductwork.

The Supernate Evaporator, Glove Box/BBA and Hot Cell exhaust systems incorporate booster blowers to overcome pressure drop through the respective filters, enable air balancing, and reduce energy consumption of Blowers B-011, B-012, and B-013.

4.1.5 System Reliability Features

Standard commercial equipment was specified where practical to minimize procurement time for replacement equipment. Spare parts and equipment are stored on site for many components.

Preventive maintenance is performed in accordance with Section 3.4.4 to enhance equipment reliability, plan outages, and minimize down time.

Supply AHUs provide air at constant volume. AHU-004 and AHU-005 each provide approximately 20,000 scfm of conditioned supply air during normal operation. Approximately 55,000 scfm exhaust flow is maintained with all three or any two of Blowers B-011, B-012, and B-013 operating. The exhaust airflow rate can be varied since these exhaust blowers are variable speed. (Appendix A, Item 2, page B3/4 3-11)

Failure events include:

1. Shutdown of one AHU on exhaust airflow falling below 55,000 scfm

   Control system logic was programmed to have AHU-004 shut down first during the supernate processing phase to maintain the potentially more contaminated supernate areas most negative.

Control system logic is programmed to have AHU-005 shut down first during the CH processing phase to assure AHU-004 continues to provide conditioned outside air to the breathing air system. Room 231 receives supply air from both AHU-004 and AHU-005 and will remain negative with respect to outside upon shutdown of AHU-005.

2. Automatically operated dampers fail closed to establish confinement.

3. Failure of one AHU requires that the total exhaust air flow rate be reduced to 40,000 scfm, resulting in 20,000 scfm more exhaust than supply air. (Appendix A, Item 2, page B3/4 3-12)

4. Coincident failure of both AHUs requires that the total exhaust air flow rate be reduced to 20,000 scfm, resulting in 20,000 scfm more exhaust than supply air.

Blowers B-011, B-012, and B-013 and the respective filtration systems are each designed to filter and exhaust 50% of the stack flow to insure 100% system design capacity with one blower out of service. Although excess exhaust blower capacity is provided blower speed is controlled to maintain exhaust flow within acceptable limits.

Power for any one of the MBVS blowers is provided by the diesel generator in the event that the electric power supply is interrupted. (Appendix A, Item 1, page 2-53 and 2-55)

4.1.6 System Control Features

4.1.6.1 System Monitoring

System controls are generally implemented and monitored at the PB HMI, which is located remotely in the operator's area. However, many components are monitored and controlled locally.

Equipment routinely monitored when in the OPERATION Mode is listed in T-CM-FW-X-OP-006, WPF CH Round Sheets.

Instrumentation that is either directly subject to TSRs or that provides information to verify compliance with TSRs is listed below. See Section 3.2.6 for a listing of alarm points. (Appendix A, Item 2, pages 3/4 1-1 through 3/4 1-4)

FIT-011, FIT-012, & FIT-013	LCO 3.1.1, Conditions A, B, C, & F
TT-011, TT-012, & TT-013	LCO 3.1.1, Conditions A, B, C, & F
MT-011, MT-012, & MT-013	LCO 3.1.1, Conditions A, B, C, & F
PDI-011F&G, PDI-012 F&G, & PDI-013 F&G	LCO 3.1.1, Conditions D & E

For a more complete listing of SS SSC components see Appendix A, Item 7.

4.1.6.2 Control Capability and Locations

Equipment is operated either remotely from the PB HMI, which is located at the operator's station, or locally using a combination of manual or powered features. The Piping & Instrument Diagrams, listed in Appendix B, identify control devices and indicate operability from the HMI.

4.1.6.3 Control Capability and Locations

Section 4.1.6.1 identifies instrumentation that is directly subject to TSRs. All responses to LCO conditions identified in the TSR are manually activated.

Alarm of PDIT-212, PDIT-213A, PDIT-213C, PDIT-226, PIT-211C, are non-TSR conditions requiring prompt response. These signals indicate off-normal pressures in the glove box, BBA, and hot cell areas and are responded to manually with a variety of alternative activities.

4.1.6.4 Setpoints and Ranges

See T-UT-FW-P-OP-500, Environmental Chill Water System and Air Handling Units, and T-UT-FW-P-OP-506, Main Building Ventilation and HEPA System, for setpoints and ranges.

4.1.6.5 Interlocks, Bypasses, and Permissives

AHU-005 is automatically interlocked to shutdown on exhaust air flow drop below 55,000 scfm for CH processing. (Appendix A, Item 2, page B3/4 3-12)

AHU-004 is automatically interlocked to shutdown on exhaust air flow drop below 40,000 scfm for CH processing. (Appendix A, Item 2, page B3/4 3-12)

AHU-004 and AHU-005 inlet air dampers are interlocked to automatically close when the respective fan is deenergized.

Damper PID2-04 is interlocked to close when Blower B-213A is deenergized.

4.2 Operations

4.2.1 Initial Configuration (Pre-startup)

The MVBS is configured for startup in accordance with the prerequisites listed in T-UT-FW-P-OP-506, Main Building Ventilation and HEPA System.

F-011, F-012, and F-013 HEPA filter in-place efficiency tests are current in accordance with SR 4.1.4. (Appendix A, Item 2, page B3/4 3-24)

Calibration of Differential Pressure Indicators is current in accordance with SR 4.1.5. (Appendix A, Item 2, page B3/4 3-24)

Calibration of Flow Indicator Transmitters is current in accordance with SR 4.1.6. (Appendix A, Item 2, page B3/4 3-24)

Air Supply and exhaust damper position settings have been established, verified, and locked or marked and secured to achieve design exhaust ventilation flow rates.

4.2.2 System Startup

Startup of the MVBS is performed in accordance with Section 6.1 of T-UT-FW-P-OP-506, Main Building Ventilation and HEPA System.

4.2.3 Normal Operations

Normal operation of the MBVS is characterized by the following statement:

The ventilation system maintains a sufficiently low absolute pressure by exhausting at least 55,000 scfm with the two AHUs operating. (Appendix A, Item 2, page B3/4 3-11)

MBVS mode changes are performed in accordance with Section 6.0 of T-UT-FW-P-OP-506, Main Building Ventilation and HEPA System.

During plant normal operations routine checks on system performance and performance data logging are performed in accordance with T-CM-FW-X-OP-006, WPF CH Round Sheets.

The HMI maintains an automatic record of exhaust air flow rate, temperature, relative humidity, and differential pressure across F-011, F-012, and F-013 Stage 4 HEPA filters.

MBVS LCO status, including the on/off status of AHU-004, AHU-005, B-011, B-012, B-013, B-202, H-202, B-213A, B-213B, and the total stack flow rate is reported at shift turnover. This information is recorded on T-CM-FW-X-OP-005, WPF Turnover Checklist.

4.2.4 Off-Normal Operations

The following off-normal operations are listed here for convenience only and may not fully agree with the controlling document. Consult the reference document listed in Appendix A for requirements.

MBVS equipment off-normal operations include the following:

LCO 3.1.1, Condition A (Appendix A, Item 2, page 3/4 1-2)

Exhaust flow rate is less than 55,000 scfm

Maintain PB negative pressure by securing one AHU and establishing a minimum exhaust flow of 40,000 scfm within one hour.

Restore Operability within 21 days or go to Standby

LCO 3.1.1, Condition B (Appendix A, Item 2, page 3/4 1-2)

Loss of one AHU
(NOTE: Separate condition entry is allowed for each AHU)

Maintain PB negative pressure by either restoring operation of the failed AHU or establishing a minimum exhaust flow of 40,000 scfm within one hour.

Restore Operability within 21 days or go to Standby

LCO 3.1.1, Condition C (Appendix A, Item 2, page 3/4 1-3)

Loss of two AHUs

Maintain PB negative pressure by either restoring operation of one of the failed AHUs or establishing a minimum exhaust flow of 20,000 scfm within one hour.

Restore Operability within 14 days or go to Standby

LCO 3.1.1, Condition D (Appendix A, Item 2, page 3/4 1-3)

One out of two Stage 3 or Stage 4 HEPA filter banks in an in-service train is out of specification (<0.15 in. w.c. or >6.0 in. w.c.)
(NOTE: Separate condition entry is allowed for each train)

Verify the other HEPA filter bank (Stage 3 or Stage 4) in the train is in specification (<0.15 in. w.c. or >6.0 in. w.c.) within one hour.

Restore Operability within three days or go to Standby

LCO 3.1.1, Condition D (Appendix A, Item 2, page 3/4 1-3).

One out of two Stage 3 or Stage 4 HEPA filter differential pressure gauges in an in-service train is inoperable
(NOTE: Separate condition entry is allowed for each train)

Restore Operability within one hour or go to Standby within four hours

LCO 3.1.1, Condition E (Appendix A, Item 2, page 3/4 1-4)

Two out of two Stage 3 and Stage 4 HEPA filter banks in an in-service train are out of specification (<0.15 in. w.c. or >6.0 in. w.c.)
(NOTE: Separate condition entry is allowed for each train)

Restore Operability within one hour or go to Standby within four hours

LCO 3.1.1, Condition E (Appendix A, Item 2, page 3/4 1-4)

Two out of two Stage 3 and Stage 4 HEPA filter differential pressure gauges in an in-service train are inoperable
(NOTE: Separate condition entry is allowed for each train)

Restore Operability within one hour or go to Standby within four hours

LCO 3.1.1, Condition F (Appendix A, Item 2, page 3/4 1-4)

The in-service train(s) exhaust flow rate gauge(s) is inoperable
(NOTE: Separate condition entry is allowed for each train)

Take train(s) with inoperable gauge(s) out of service within one hour

Establish minimum of 55,000 scfm exhaust flow rate within one hour

Or go to Standby within four hours

F-011, F-012, and F-013 Stages 3 and 4 HEPA filters reduce radionuclide particulate emission under normal and accident conditions. (Appendix A, Item 1, page 3-31)

Off-normal conditions are surveyed at the HMI which monitors exhaust air flow rate, temperature, and relative humidity at the F-011, F-012, and F-013 Stage 4 HEPA filters. Routine surveillance performed in accordance with T-CM-FW-X-OP-006, WPF CH Round Sheets, is an additional source for identifying off-normal conditions.

Off-normal operations and recovery of the MBVS is included in T-UT-FW-P-OP-506, Main Building Ventilation and HEPA System.

4.2.5 System Shutdown

Operation of the MBVS is required by LCO 3.1.1 (Appendix A, Item 2, page 3/4 1-1) for CH waste to be exposed (Appendix A, Item 2, page 1-5). Prior to shutdown of any portion of the system ensure the plant operational mode meets desired status and compliance with any applicable LCO. (Appendix A, Item 2, page 3/4 1-1)

Shutdown of MBVS equipment results in changing area pressures within the PB. To manage PB negative pressures and to maximize confinement, exhaust air should exceed supply by a minimum of 15,000 scfm at all times. Consequently shutdown must be executed by a staged shutdown of supply air accompanied by a staged shutdown of exhaust air. Care should be exercised to avoid injury at doorways or vinyl enclosures during this period of changing area pressures.

Specific procedures for shutdown of the MBVS is included in T-UT-FW-P-OP-506, Main Building Ventilation and HEPA System, Section 6.3.

4.2.6 Safety Management Programs and Administrative Control

The PB is a Hazard Category 2 facility with a major purpose to confine release of radioactive material. Major goals of the MBVS are to maintain confinement by establishing a negative pressure within the PB with respect to outside atmosphere while capturing fugitive particles and providing HEPA filtration of PB exhaust air. (Appendix A, Item 1, pages 1-1 and 5-7)

Configuration management of design documents is controlled in accordance with T-CM-FW-P-AD-061, Project Plans and Procedures.

Physical changes to the MBVS are requested in accordance with T-CM-FW-A-MT-003, Corrective Maintenance Plan, and T-CM-FW-A-AD-011, Configuration Management Program.

Access into the PB is accomplished through use of a Radiological Work Permit, T-CM-FW-P-RP-309.

Maintenance is performed in accordance with Section 3.4.4.

4.3 Testing and Maintenance

4.3.1 Temporary Configurations

During calibrations, functional testing, and maintenance, it may be necessary to temporarily isolate or disable components of the MBVS. Building traffic may be restricted. Operations may also be suspended prior to starting or conducting calibrations or functional tests.

4.3.2 TSR Required Surveillances

TSR-required surveillances are listed in Section 3.4.2.

The Operations Manager ensures that MBVS calibrations and functional testing identified in T-UT-FW-P-OP-506, Main Building Ventilation and HEPA System, are performed.

F-011, F-012, and F-013 in-place HEPA filter leak tests are performed by an independent contractor and documented in a formal report. Following review and acceptance, the report is filed in Document Control.

4.3.3 Non-TSR Inspections and Testing

Routine surveillance is performed in accordance with T-CM-FW-X-OP-006, WPF CH Round Sheets, when in the OPERATION Mode.

Verification of damper position is performed annually. Dampers not accessible because of ALARA are not visually verified.

Additional inspections and testing may be performed following the Work Instructions Guidance, included as Attachment M to T-CM-FW-P-AD-061, Project Plans and Procedures.

4.3.4 Maintenance

4.3.4.1 Post-Maintenance Testing

Maintenance is performed in accordance with Section 3.4.4.

In-place HEPA filter leak tests are performed in accordance with ASME N510.

Preventive maintenance includes periodic vibration analysis and visual inspection of the blowers and annual flow and differential pressure instrumentation calibration.

5.0 APPENDICES/ATTACHMENTS

Appendix A	Source Documents
Appendix B	System Drawings and Lists
Appendix C	System Procedures
Attachment 1	TRU/Alpha Waste Treatment Project Main Building Ventilation System Overview

Appendix A: Source Documents

1.	T-CM-FW-R-AD-001	TRU/Alpha Low Level Waste (LLW) Treatment Project Documented Safety Analysis
2.	T-CM-FW-X-AD-022	Technical Safety Requirements for TRU/Alpha Low Level Waste Treatment Project Waste Processing Facility (WPF)
3.	DOE-STD-3024-98	Content of System Design Descriptions
4.	ERDA 76-21	Nuclear Air Cleaning Handbook, 1979
5.	ASHRAE HVAC Design Guide for DOE Nuclear Facilities, 1993	
6.	T-CM-105-R-ME-002	Overpressure Test Report for HV HEPA Filters
7.	T-CM-FW-A-EG-004	Safety Significant Structures, Systems and Components
8.	DOE-HBK-1169-2003	Nuclear Air Cleaning Handbook (used only for Definitions)
9.	ASME N510-1989	Testing of Nuclear Air-Cleaning Systems
10.	T-CM-FW-A-EG-001	Design Criteria Package
11.	T-CM-105-R-ME-003	Evaluation of Filtration Group #75152 Main Building Ventilation HEPAs for Use with Fire Agent FM-200
12.	T-CH-FW-R-AD-001	Glove Box Design Basis Fire Impacts Analysis on Main Building Ventilation HEPA Trains
13.	T-CM-FW-R-ME-001	HVAC Supply & Exhaust Damper Position Verification
14.	T-CM-FW-A-MT-001	Reliability Assurance Program Description
15.	T-CM-FW-A-MT-002	Preventive Maintenance Plan
16.	T-CM-FW-A-MT-003	Corrective Maintenance Plan
17.	T-CM-FW-A-QP-001	Quality Assurance Program Description
18.	T-CM-FW-A-AD-011	Configuration Management Program
19.	T-CM-FW-X-OP-005	WPF Turnover Checklist

Appendix B: System Drawings and Lists

Page 1 of 2

Test & Balance Analysis Reports:

T-CM-107-R-ME-002, R2	1/15/03	Certified Test & Balance Analysis Report
T-CM-107-R-ME-003, R1	1/15/03	Supplemental Test & Balance Analysis Report, Including Tab Verification
T-CM-107-R-ME-004, R1	10/28/03	Building System Airflow & Ambient Pressure Verification Report
T-CM-107-R-ME-005, R0	1/03/05	Building System Airflow & Ambient Pressure Verification Report
T-CM-107-R-ME-006, R0	5/9/05	Test & Balance Analysis Report for Glovebox/Box Breakdown Area

Process Flow Diagrams (PFDs):

T-CM-FW-D-ME-202 through 205

Piping & Instrument Diagrams (P&IDs):

T-CM-FW-D-PR-001 through 004

T-CM-FW-D-PR-016, Sheet 1 of 2

T-CM-FW-D-PR-034, Sheets 1 and 2

T-CM-FW-D-PR-035

T-CM-FW-D-PR-036, Sheets 1 and 2

T-CM-FW-D-PR-037

T-CM-FW-D-PR-038

T-CM-FW-D-PR-055, Sheet 1 of 3

Construction Drawings:

T-CM-FW-D-ME-220 through 239

Appendix B: System Drawings and Lists

Page 2 of 2

Supply Duct Support Drawings:

T-CM-49-D-ME-002 through 5 and 9

Exhaust Duct Support Drawings:

T-CM-FW-D-SS-160

T-CM-FW-D-SS-165, Sheets 1 and 2

T-CM-FW-D-SS-167

T-CM-FW-D-SS-174

T-CM-FW-D-SS-190

T-CM-FW-D-SS-191, Sheets 1 and 2

T-CM-FW-D-SS-192 through 196

T-CM-FW-D-SS-198

T-CM-FW-D-SS-199, Sheets 1 and 2

T-CM-FW-D-SS-202, Sheets 1 and 2

T-CM-FW-D-SS-203

T-CM-FW-D-SS-205

Penetration Schedule:

T-CM-FW-W-SC-001

Appendix C: System Procedures

T-CM-FW-X-OP-006, WPF CH Round Sheets

T-UT-FW-P-OP-500, Environmental Chill Water System and Air Handling Units

T-UT-FW-P-OP-506, Main Building Ventilation and HEPA System

T-CM-FW-P-MT-506, Main Building Ventilation System Preventive Maintenance

T-CM-FW-I-MT-002, Rotating Equipment Preventive Maintenance Work Instruction

T-CM-FW-P-RP-309, Environmental Permits – Inspections/Monitoring and Reporting

T-CM-FW-P-RP-322, Contamination Control

T-CM-72-M-OP-001, Control System Operations Manual

T-CH-FW-P-MT-401, Hot Cell and BBA Supply and Exhaust Blowers Preventive Maintenance

T-CM-FW-P-MT-001, Preventive Maintenance of Idle Equipment

T-CM-FW-P-AD-061, Project Plans and Procedures

T-CM-FW-P-OP-011, Programmable Logic Controller and Human Machine Interface Operations

Attachment 1: TRU/Alpha Waste Treatment Project Main Building Ventilation System Overview

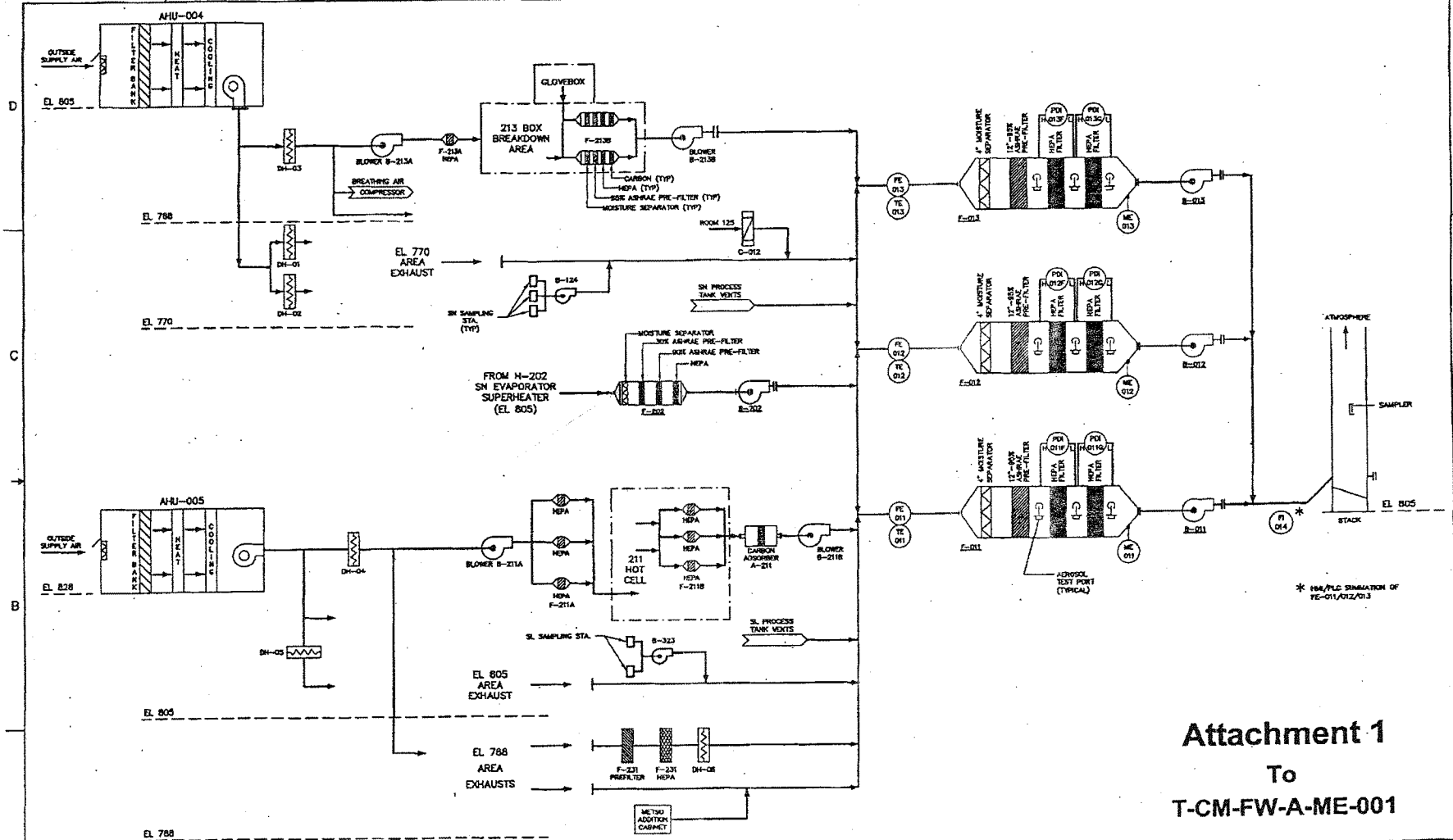

Attachment 1

To

T-CM-FW-A-ME-001

LEGEND

B – BLOWER
C – CONDENSATE COOLING COIL
DH – DUCT HEATER
F – FILTER HOUSING
FE – FLOW ELEMENT
ME – MOISTURE ELEMENT
TE – TEMPERATURE ELEMENT

Uncontrolled Copy printed on 07-30-07, 13:45:03 hours.

REV	DATE	BY	CHK'D	APP'D	DESCRIPTION/ISSUE

FOSTER WHEELER
FOSTER WHEELER ENVIRONMENTAL CORPORATION

TRU/ALPHA WASTE TREAT. PROJ.
MAIN BUILDING VENTILATION SYSTEM
OVERVIEW

SIZE D | SCALE NONE | SHEET 1 OF 1

End of Document

Attachment 6 – T-CM-FW-A-EG-004, R7, Safety Significant Structures, Systems, and Components

FOSTER WHEELER

FOSTER WHEELER ENVIRONMENTAL CORPORATION

TRU/ALPHA WASTE TREATMENT PROJECT

DOCUMENT NO.

T-CM-FW-A-EG-004

SAFETY SIGNIFICANT STRUCTURES, SYSTEMS AND COMPONENTS

John Gregorie Wagner
REGISTERED ENGINEER
AGRICULTURE
No. 20649
STATE OF TENNESSEE
02-09-06

Revision	Prepared by	Reviewed by	Approved by	Date	Pages Affected
0	J. G. Wagner	B. Roy	J. G. Wagner	11/4/03	All
1	J. G. Wagner	B. Roy	J. G. Wagner	12/5/03	7, 10
2	J. G. Wagner	B. Roy	B. Roy	4/16/04	8,11, Appendix
3	B. Roy	D. Gagel	B. Roy	4/19/04	8, Appendix
4	B. Roy	D. Gagel	B. Roy	4/20/04	8, Appendix
5	J. G. Wagner	D. Gagel	B. Roy	7/25/05	All
6	J. G. Wagner	S. Hughes	R. McKay	2/6/06	4, 6-9, 12-14, Appendix
7	J. G. Wagner	S. Hughes	R. McKay	2/9/06	13

Uncontrolled Copy printed on 07-30-07, 13:45:03 hours.

Revision No.	Affected Pages, Sections, and Paragraphs	Reason for Revision
0	All	Initial Issue
1	7, 10	Change typo in equipment tag number and typo in drawing number
2	8, 11, Appendix	Added sprinklers in Room 122 (Revised Appendix – SS SSC List). Added reference to additional sprinkler drawings. Added piping due to boiler reconfiguration.
3	8, Appendix p.3	Redefine pressure boundary on boiler blowdown tank vent piping
4	8, Appendix p.3	Redefine pressure boundary on boiler blowdown tank vent piping
5	All	Align with DSA Rev. 10
6	4, 6-9, 12-14, Appendix	Align with DSA Rev. 11
7	13	DOE Requirement

1.0 PURPOSE 4

2.0 PROCESS BUILDING AND STRUCTURE 4

2.1 Safety Function....4
2.2 Identification of SS Components of the Process Building 5

3.0 SUPERNATE TRANSFER PIPELINE SECONDARY CONTAINMENT SYSTEM 5

3.1 Safety Function....5
3.2 Identification of SS Components of the Supernate Transfer Pipeline Secondary Containment System....5

4.0 MAIN BUILDING VENTILATION SYSTEM 6

4.1 Safety Function....6
4.2 Identification of SS Components of the Main Building Ventilation System 7

5.0 FIRE BLANKET 11

5.1 Safety Function....11
5.2 Identification of SS Components of the Fire Blanket....11

6.0 LIDDED METAL CONTAINERS 11

6.1 Safety Function....11
6.2 Identification of SS Components of the Lidded Containers....11

7.0 GLOVEBOX WATER MIST SYSTEM 12

7.1 Safety Function....12
7.2 Identification of SS Components of the Glovebox Water Mist System 12

8.0 RESTRICTIVE FLOW ORIFICES 12

8.1 Safety Function....12
8.2 Identification of the SS Components of the Restricted Flow Orifice 13

9.0 MAIN HYDROGEN GAS CYLINDER SUPPORT RACK ENCLOSURE 13

9.1 Safety Function....13
9.2 Identification of the SS Components of the Main Hydrogen Gas Cylinder Support Rack Enclosure....13

10.0 REFERENCES 14

11.0 APPENDICES....14

1.0 PURPOSE

This document identifies the project's safety significant components that fully comprise the safety significant structures, systems and components (SS SSCs) identified in the Documented Safety Analysis (DSA).

Each of the eight (8) SS SSCs is discussed separately. These eight (8) SS SSCs are:

1. Process Building and Structure
2. Supernate Transfer Pipeline Secondary Containment System
3. Main Building Ventilation System
4. Fire Blanket
5. Lidded Metal Containers
6. Glovebox Water Mist System
7. Restrictive Flow Orifices
8. Main Hydrogen Cylinder Support Rack Enclosure

2.0 PROCESS BUILDING AND STRUCTURE

2.1 Safety Function

The passive building structure works in conjunction with an operable ventilation system (i.e., building walls provide confinement for differential pressure) and serves as a barrier to confine release of radioactive material. In the event of a loss of ventilation, the passive Process Building structure, though not specifically credited, reduces the overall facility Leakpath Factor (LPF).

The Process Building has four ***passive*** safety functions to protect the worker:

- Maintain integrity during seismic event so personnel may safely egress the facility [DSA sections 3.3.2.3, 4.4.1, 5.3, 5.5.5.1] [TSR section 6.1]
- Confinement for release of radiological material during fire event [DSA sections 3.4.2.1.6, 3.3.2.3, 4.4.1, 5.3, 5.5.5.1] [TSR section 6.1]
- Provide radiation shielding for anticipated gamma and neutron source term during normal and accident conditions [DSA sections 3.3.2.3, 4.4.1, 5.5.5.1] [TSR section 6.1]
- Confinement for release of radiological material, including airborne release and tank leaks [DSA sections 3.3.2.3, 4.4.1, 5.3, 5.5.5.1] [TSR section 6.1]

The Process Building includes the adjacent Personnel Building Retaining Wall which also has a ***passive*** safety function:

- Serves as the southern portion of the large area enclosure to ensure 9-ft separation between with Hydrogen Main Storage Cylinder and the CH waste. [DSA Sections 4.4.8 and 5.5.2.11] [TSR Section 6.6]

2.2 Identification of SS Components of the Process Building

The Process Building concrete foundation, walls, and roof are considered SS components to the following extent:

- Modifications to the building structure must be evaluated to ensure that the structural design continues to meet UBC requirements described in DSA section 4.4.1.1.
- Penetrations in walls must be evaluated to ensure radiation shielding and confinement of radiological material will not be negatively impacted.

3.0 SUPERNATE TRANSFER PIPELINE SECONDARY CONTAINMENT SYSTEM

3.1 Safety Function

Based on the safety analysis, the Supernate Transfer Pipeline Secondary Containment System is a safety significant passive design feature [DSA section 3.3.2.3.2]. The system supports the defense-in-depth Supernate Transfer Control Program.

The safety function of the Supernate Transfer Pipeline Secondary Containment System is to contain the source term of supernate potentially released from the primary containment [DSA section 3.3.2.3.3, 3.3.2.3.4, TSR section 6.2]. The contribution to the defense-in-depth Supernate Transfer Control Program is that the passive design feature provides the physical configuration necessary to accomplish the leak detection function that is implemented by the Supernate Transfer Control Program when the supernate source term is present (i.e., only during supernate transfers). This dependency of this defense-in-depth Program on the passive design feature reinforces the safety significance of the Supernate Transfer Pipeline Secondary Containment System components [DSA sections 3.3.2.3.3, 3.3.2.3.4, 4.4.2, 5.3, 5.5.5.2].

3.2 Identification of SS Components of the Supernate Transfer Pipeline Secondary Containment System

The Supernate Transfer Pipeline Containment System design consists of a four-inch, Schedule 10 secondary "containment pipe" through which a two-inch Schedule 40, primary "carrier pipe" (i.e., primary pipe) is routed. The system provides an annulus volume outside the primary pipe that is provided to contain releases of supernate from the primary pipe. The containment pipe interconnects the Melton Valley Storage Tank Valve Box and the transfer pipe penetration into the WPF tank vault. [DSA sections 3.3.2.3.3, 3.3.2.3.4, 4.4.2, 5.3, 5.5.5.2] [Drawing T-SN-FW-D-ME-090].

The safety function requirement to contain the source term of supernate potentially released from the primary pipe is satisfied by the four-inch, schedule 10 secondary "containment pipe" and associated valves at the pressure boundary. Therefore, the containment pipe and normally closed valves at the pressure boundary are designated as SS components. The two-inch, Schedule 40, primary "carrier pipe" is not an SS component.

NOTE: The transfer pipeline supports are seismically qualified per UBC seismic criteria 2A. [DSA sections 4.4.2.2, 4.4.2.4]

The Supernate Pipe Containment Leak Detection System is part of a the defense in depth Supernate Transfer Control Program required by TSR 5.4.5, *Conduct of Operations,* and DSA section 11.3.3.1, *Waste Transfer Control Program.* Specifically, operability of the secondary containment leak detection system (no leaks indicated) is required prior to and during waste transfers. [DSA sections 2.5.1.1, 4.4.2.2, 5.5.5.2] The Supernate Pipe Containment Leak Detection System depends on the safety significant Supernate Transfer Pipeline Containment System for its function. The Supernate Pipe Containment Leak Detection System provides a material contribution only to the defense in depth Supernate Transfer Control Program function. Therefore, the components associated with the leak detection system are not SS components.

4.0 MAIN BUILDING VENTILATION SYSTEM

4.1 Safety Function

The safety function of the Main Building Ventilation System is to provide confinement of radiological material during normal operation and filtration of exhaust to reduce the release of radionuclide particulate emissions to the atmosphere during normal and accident conditions. The system is identified as an SS SSC for protection of the worker [TSR Bases section, page B 3/4 1-1]. Under accident conditions, the filtration function also provides defense in depth [DSA section 4.4.3.1].

The system maintains confinement by maintaining the WPF Process Building at a negative pressure and establishing areas or zones of succeeding greater differential pressure with respect to the atmosphere. [DSA sections 3.3.2.3.3, 4.4.3.1, 4.4.3.2, 4.4.3.3, 5.3.1, 5.5.1] [TSR Bases section, page B 3/4 1-1]. The safety function is accomplished through LCO 3.1.1, which ensures OPERABILITY of the Process Building confinement ventilation system in OPERATION MODE during supernate processing. [TSR Bases section, page B 3/4 1-1]

4.1.1 Confinement of Radiological Material During Normal Operation

The confinement of the radiological material during normal operation provides protection to the worker. During normal operations the system is used to remove possible airborne contaminants from the Process Building. This is accomplished by the inflow of fresh, uncontaminated, outside air into the Process Building, and the exhaust of potentially contaminated air through the system ductwork. This flow path is assured by the implementation of the following TSR controls:

- LCO 3.1.1 ensures the Process Building is maintained at a negative pressure during OPERATION MODE. This is accomplished by requiring the minimum net exhaust flow from the Process Building.
- Surveillance requirement SR 4.1.2 verifies the combined flow through the in-service exhaust trains is within limits.
- Surveillance requirement SR 4.1.3 verifies the air handling units are operating.
- Surveillance requirement SR 4.1.6 requires the calibration of local exhaust flow indicating transmitters.

4.1.2 Filtration of Exhaust During Normal and Accident Conditions

The filtration function provides protection to the worker by reducing the release of radionuclide particulate emissions to the atmosphere during normal and accident conditions. The filtration function is assured by the implementation of the following TSR controls:

- LCO 3.1.1 requires the differential pressure across the stage 3 and 4 HEPA filters be within specifications and the associated differential pressure gauges be OPERABLE.
- Surveillance requirement SR 4.1.1 verifies the differential pressure across stage 3 and 4 HEPA filters is within specifications.
- Surveillance requirement SR 4.1.4 verifies the efficiency of stage 3 and 4 HEPA filters.
- Surveillance requirement SR 4.1.5 requires the calibration of stage 3 and 4 HEPA differential pressure gauges.

4.2 Identification of SS Components of the Main Building Ventilation System

The identification of the components that provide a material contribution to the safety function of the Main Building Ventilation System is accomplished in this section. In some cases (as identified), the component is so identified solely because it is part of the confinement (i.e., pressure) boundary of the SS SSC. The two following sections identify the SS components based on the two safety functions of the Main Building Ventilation System.

4.2.1 Identification of SS Components Based on the Confinement of Radiological Material

The Main Building Ventilation System provides the safety function of confinement of radiological material. The following discussion describes the criteria by which components within the system were classified as safety significant (SS) components.

The Main Building Ventilation System is designed to satisfy the safety significant function of confinement of radiological material by maintaining a negative pressure within the Process Building relative to the atmosphere during the OPERATION MODE. The Main Building Ventilation System does not have a safety function requirement in STANDBY mode. The system accomplishes this safety function by directing exhaust airflow from the Process Building to HEPA

filters that are located on the roof of the Process Building. Process ductwork directs the exhaust airflow from the Process Building penetrations to the final stage HEPA filters.

The project ensures LCO 3.1.1 is satisfied and a negative pressure is maintained in the Process Building by administratively maintaining a specified ventilation flow rate. Flow indicating transmitters FIT–011, 012, and 013 provide the necessary flow indication to satisfy LCO 3.1.1. The integrity of the pressure boundary of the process ductwork ensures the integrity of the flow indication used to satisfy the LCO 3.1.1.

The net ventilation flow rate from the Process Building is important to the safety function and is therefore surveilled and assured. How the specified flow is achieved is secondary to the confinement safety function. Therefore, the Supply Air Handling Units and Ventilation Blowers are not included among the SS components since failure to meet the specified flow results in a cessation of operations. The Supply Air Handling Units and Ventilation Blowers only provide defense-in-depth functions for the protection of the worker.

The following table describes the components within the Main Building Ventilation System that materially contribute to the confinement function.

Component	Design Feature
Flow Elements FE-011, FE-012, and FE-013	Flow elements necessary for operation of flow indicating transmitters FIT-011, FIT-012, and FIT-013
Flow Indicating Transmitters FIT-011, FIT-012, and FIT-013	Provides indication of exhaust flow, thereby providing indirect indication that negative pressure is maintained within the Process Building
Impulse Lines and Isolation Valves for Flow Indicating Transmitters FIT-011, FIT-012, and FIT-013	Pressure boundary only
Flow Straightening Vanes for FIT-011, FIT-012, and FIT-013	Necessary for proper operation of flow indicating transmitters FIT-011, FIT-012, and FIT-013
Temperature Elements TE-011, TE-012, and TE-013	Temperature elements necessary to standardize FIT-011, FIT-012, and FIT-013 flow indications
Temperature Transmitters TT-011, TT-012, and TT-013	Temperature transmitters necessary to standardize FIT-011, FIT-012, and FIT-013 flow indications
HEPA Filter Housings for HEPA filters F-011, F-012, and F-013	Pressure boundary only
Filter Housing Inlet Isolation Dampers ID3-22, -24, -26	Pressure boundary only

Component	Design Feature
F-011, F-012, and F-012 Filter Housing Drain Valves	Pressure boundary only
Impulse Lines, Root Isolation Valves, Equalization Valves, High Side Instrument Isolation Valves, and Low Side Instrumentation Isolation Valves for the following Differential Pressure Indicators • PDI-011D(F); PDI-012D(F); PDI-013(D)F (Stage 3 HEPA Filters DP) • PDI-011E(G); PDI-012E(G); PDI-013E(G); PDIT-011, PDIT-012, PDIT-013 (Stage 4 HEPA Filters DP)	Pressure boundary only
Root Isolation Valves for the following Differential Pressure Indicators • PDI-011B, PDI-012B, PDI-013B (Moisture Separator DP) • PDI-011C, PDI-012C, PDI-013C (Pre-Filter DP)	Pressure boundary only
Ductwork which extends from the Process Building penetrations to and including the HEPA Filter Housings	Pressure boundary necessary to direct exhaust airflow from the Process Building to the final confinement feature (i.e., HEPA filters)
Ductwork Supports for the above ductwork	Maintains physical configuration of ductwork
Blower B-202	Pressure boundary only
Ductwork which extends from the Process Building penetrations to the suction of the Blower B-202, including the inlet damper PID 3-21	Pressure boundary only
Flex Connections on Blower B-202 (suction and discharge sides)	Pressure boundary only
Thermowell TW-202 in the suction ductwork of Blower B-202	Pressure boundary only
Piping which extends from boiler relief valves (PSV-700A and 700B) to the exhaust header	Pressure boundary necessary to direct steam release from boiler to final confinement feature (i.e., HEPA filters)
Pipe Supports for above piping	Maintains physical configuration of piping
Boiler blowdown tank (T-B032) and feed tank (T-B031)	Pressure boundary necessary to control air inlet to final confinement feature (i.e., HEPA filters)
Piping from feed tank (T-B031) and blowdown tank (T-B032) to exhaust header	Pressure boundary necessary to direct vapor release from T-B032 or control air inlet from this connection to final confinement feature

Component	Design Feature
	(i.e., HEPA filters)
Pipe Supports for above piping and tanks	Maintains physical configuration of piping

4.2.2 Identification of SS Components Based on the Filtration of Exhaust

The Main Building Ventilation System provides the safety function of filtration of the exhausted air to reduce the release of radionuclide particulate emissions to the atmosphere during normal and accident conditions. The following table describes the components within the system that materially contribute to the filtration function.

Component	Design Feature
Pressure Differential Indicators for Stage 3 and Stage 4 HEPA Filters • **PDI-011F** • **PDI-011G** • **PDI-012F** • **PDI-012G** • **PDI-013F** • **PDI-013G**	• LCO 3.1.1 requires the differential pressure across the stage 3 and 4 HEPA filters be within specifications and the associated differential pressure gauges be OPERABLE. • Surveillance requirement SR 4.1.1 verifies the differential pressure across stage 3 and 4 HEPA filters be within specifications. • Surveillance requirement SR 4.1.5 requires the calibration of stage 3 and 4 HEPA pressure differential gauges.
Impulse Lines, Root Isolation Valves, Equalization Valves, High Side Instrument Isolation Valves, and Low Side Instrumentation Isolation Valves for Pressure Differential Indicators • PDI-011F • PDI-011G • PDI-012F • PDI-012G • PDI-013F • PDI-013G	Pressure boundary only
HEPA Filters F-011, F-012, and F-013	HEPA filters provide required defense-in-depth filtration
HEPA Filter Housings for HEPA filters F-011, F-012, and F-013	Provides the necessary structure for HEPA filters to satisfy efficiency requirements.

5.0 FIRE BLANKET

5.1 Safety Function

Fire blankets have a passive function to protect the worker. The fire proof material of the fire blankets are credited in the analyses for reducing the resultant dose consequences associated with fires in Contact Handled Glove Box (CHGB).

5.2 Identification of SS Components of the Fire Blanket

The fire blankets are considered SS components to the following extent:

- The fire blanket is constructed of silica-based-abrasion-resistant fiber.
- This fire proof material is suitable for continuous use at 1800°F and able to withstand short-term exposure up to 3000°F.

Changes in the fire blanket construction must be evaluated to ensure that the fire retardant characteristics are in accordance with DSA Section 4.4.4.3, and TSR section 6.3.

6.0 LIDDED METAL CONTAINERS

6.1 Safety Function

Lidded metal containers have a passive safety function to protect the worker. The lidded metal containers are credited in the analyses for reducing the resultant dose consequences associated with impacts, spills and fires in staging areas.

6.2 Identification of SS Components of the Lidded Containers

The lidded metal containers are considered SS components to the following extent:

- Lidded Metal Containers shall be of sound structural integrity
- The lid shall be securely fixed and made of metal

Changes in the design of the lidded metal containers must be evaluated to ensure that the characteristics described in DSA section 4.4.5.3 and TSR section 6.4 are maintained.

7.0 GLOVEBOX WATER MIST SYSTEM

7.1 Safety Function

The safety significant function of the glovebox water mist system is worker life safety in Room 231 of the Process Building and the economic consideration of property damage and loss of production [DSA Sections 4.4.6.3 and 5.3.1].

The CHGB water mist system is a manually activated system that is maintained as an SS SSC. The CHGB water mist system suppresses fires in the GB or BBA and is important for mitigating a fire event.

7.2 Identification of SS Components of the Glovebox Water Mist System

The mechanical equipment shown on the Water Mist System Drawings T-CM-95-D-FP-001, sheets 1 through 4, comprise the safety significant components of the glovebox water mist system with the following exception:

- Exception: The water filling system does not include SS components. Therefore, the following components are not SS components reference (P&ID portion of the water mist system drawings):

  - Item 16 Water Inlet Isolation Valve
  - Item 17 Water Inlet 30 Micron Filter

The water mist fire detection system has a backup power supply from the Uninterruptible Power Supply (UPS). Neither the detection system, the normal power supply, nor the backup power supply are considered SS components. The primary activation of the water mist system is via the manual pull boxes located at several locations around the CHGB. The backup activation of the water mist system is via the manual override handles directly mounted on the solenoid actuated control valves (Item 20 on the P&ID portion of the water mist system drawings). Furthermore, an interruption of the normal power supply to this system, and the Process Building as a whole, precipitates worker evacuation of the building.

8.0 RESTRICTIVE FLOW ORIFICES

8.1 Safety Function

The hydrogen gas restrictive flow orifice (RFO), three total, is a passive component designated SS SSC. One RFO controls the rate of release of hydrogen gas from the HSGS System main hydrogen gas supply cylinder in the event there is a system failure downstream of the cylinder's

CGA valve. The other two RFOs control the rate of release of hydrogen gas from the HSGS System hydrogen day reservoir in the event of failure of connections to that reservoir.

8.2 Identification of the SS Components of the Restrictive Flow Orifice

The restrictive flow orifices are considered SS components to the following extent:

- Orifice diameter shall be less than 0.020 inches
- Orifice shall be constructed from 300 series stainless steel compatible with hydrogen gas service
- Orifice shall be installed in the Hydrogen Main Storage Cylinder between the cylinder valve and the CGA fitting
- Orifice shall be installed and oriented correctly (orifice located within reservoir connection) in the upper and lower ports of the hydrogen day reservoir

Changes in the design of the restrictive flow orifices must be evaluated to ensure that the characteristics described in DSA section 4.4.7 and TSR section 6.5 are maintained.

Additionally, the Hydrogen System Day Reservoir and 3-way valve (valve # H_2-004) are Defense-in-Depth items for worker protection and shall be considered as equipment important to safety.

9.0 MAIN HYDROGEN GAS CYLINDER SUPPORT RACK ENCLOSURE

9.1 Safety Function

The safety function of this design feature is to provide a nominal 9-ft separation distance between the HSGS hydrogen cylinder support rack and the nearest CH waste container.

9.2 Identification of the SS Components of the Main Hydrogen Gas Cylinder Support Rack Enclosure

The Main Hydrogen Gas Cylinder Support Rack Enclosure is considered a SS component with the following features:

- Enclosure is nominally five feet high (minimum height) chain link fence
- Enclosure is equipped with a single gate along the east side
- Enclosure provides a nominal 9-ft separation distance between the hydrogen cylinder storage rack and the nearest CH waste container
- The support rack is attached to the retaining wall to ensure the nominal 9-ft separation distance between the hydrogen cylinder storage rack and the nearest CH waste container is maintained

- The portion of the Personnel Building retaining wall that forms the southern portion of the enclosure, see Section 2.1
- Cylinder Storage Rack (or Cage) and Cylinder restraints

Changes in the design of the enclosure must be evaluated to ensure that the characteristics described in DSA sections 4.4.8 and 5.5.2.11 and TSR section 6.6 are maintained.

10.0 REFERENCES

T-CM-FW-R-AD-001, *TRU/Alpha Low Level Waste (LLW) Treatment Project Documented Safety Analysis*

T-CM-FW-X-AD-022, *TRU/Alpha Low Level Waste (LLW) Treatment Project Technical Safety Requirements*

T-CM-95-D-FP-001, Sheets 1, 2, 3, 4 & 5 of 5, *Fire Protection Water Mist System*

11.0 APPENDICES

Safety Significant SSCs Components List

Ventilation Equipment Important to Safety Components List

Safety Significant HVAC Exhaust Duct Supports

Safety Significant SSCs
Components List

Identification Number	Component Description	Comments
1 MAIN BUILDING VENTILATION SYSTEM		
F-011	MBVS HEPA Housing	
F-011	F-011 Stage 3 HEPA	
F-011	F-011 Stage 4 HEPA	
PDI-011F	F-011 Stage 3 HEPA Pressure Differential Gauge	
PDI-011G	F-011 Stage 4 HEPA Pressure Differential Gauge	
FE-011	Flow Element	includes internal straightening vanes
FIT-011	Flow Indicating Transmitter	
F-012	MBVS HEPA Housing	
F-012	F-012 Stage 3 HEPA	
F-012	F-012 Stage 4 HEPA	
PDI-012F	F-012 Stage 3 HEPA Pressure Differential Gauge	
PDI-012G	F-012 Stage 4 HEPA Pressure Differential Gauge	
FE-012	Flow Element	includes internal straightening vanes
FIT-012	Flow Indicating Transmitter	
F-013	MBVS HEPA Housing	
F-013	F-013 Stage 3 HEPA	
F-013	F-013 Stage 4 HEPA	
PDI-013F	F-013 Stage 3 HEPA Pressure Differential Gauge	
PDI-013G	F-013 Stage 4 HEPA Pressure Differential Gauge	
FE-013	Flow Element	includes internal straightening vanes
FIT-013	Flow Indicating Transmitter	

Safety Significant SSCs
Components List

Identification Number	Component Description	Comments
2 WATER MIST SYSTEM		
	All mechanical items (with exception of items identified in Section 7.2)	
3 WPF PROCESS BUILDING		
	Steel and Concrete Structure	
4 SN TRANSFER PIPELINE SECONDARY CONTAINMENT		
	4" sch 10S secondary containment pipe and fittings	
1" BAN210	Secondary Containment Drain Valve	Pressure Boundary Only
3/8" NEN213	Nitrogen Fill Line Valve	Pressure Boundary Only
3/8" NEN212	Nitrogen Fill Line Valve	Pressure Boundary Only
3/8" PLN211	Nitrogen Fill Line Valve	Pressure Boundary Only
PSV-114A		
3/8" NEN214	Pressure Transmitter Isolation Valve	Pressure Boundary Only
3/8" NEN215	Pressure Transmitter Vent Valve	Pressure Boundary Only
PIT-114A3		Pressure Boundary Only
PS-496	Transfer Line Pipe Supports	
5 FIRE BLANKET		
6 LIDDED METAL CONTAINERS		

Safety Significant SSCs
Components List

Identification Number	Component Description	Comments
7 RESTRICTIVE FLOW ORIFICES		
FO	Hydrogen Main Supply Cylinder RFO	Furnished by Compressed Gas Cylinder Vendor
FO-Y200A	Hydrogen Day Reservoir Inlet/Outlet RFO	
FO-Y200B	Hydrogen Day Reservoir Bleed/Drain RFO	
8 MAIN HYDROGEN GAS CYLINDER SUPPORT RACK ENCLOSURE		
Enclosure	Fence, Gate, and a portion of the Personnel Building Retaining Wall	
CSC #3	Hydrogen Main Supply Cylinder Storage Cage	
Chain with Accessories	Hydrogen Main Supply Cylinder Restraint	

Ventilation Equipment Important to Safety
Components List

Identification Number	Component Description	Comments
1 MAIN BUILDING VENTILATION SYSTEM		
3/8" PLF01102	PDI-011B & PDI-011C Root Valve	
3/8" PLF01103	PDI-011C Root Valve	
3/8" PLF01104	PDI-011D & PDI011F Root Valve	
3/8" PLF01105	PDI-011D & PDI-011F Root Valve	
3/8" PLF01106	PDIT-011, PDI-011E & PDI-011G Root Valve	
3/8" PLF01107	PDIT-011, PDI-011E & PDI-011G Root Valve	
3/8" PLF01126	PDI-011 Isolation Valve	
3/8" PLF01128	FIT-011 Isolation Valve	
3/8" PLF01129	FIT-011 Isolation Valve	
1" DR01130	F-011 Housing Drain Valve (north side)	
1" DR01132	F-011 Housing Drain Valve (south side)	
ID3-22	F-011 Filter Housing Inlet Isolation Damper	
TE-011	Temperature Element	
TT-011	Temperature Transmitter	
3/8" PLF01202	PDI-012B & PDI-012C Root Valve	
3/8" PLF01203	PDI-012C Root Valve	
3/8" PLF01204	PDI-012D & PDI-012F Root Valve	
3/8" PLF01205	PDI-012D & PDI-012F Root Valve	
3/8" PLF01206	PDIT-012, PDI-012E & PDI-012G Root Valve	
3/8" PLF01207	PDIT-012, PDI-012E & PDI-012G Root Valve	
3/8" PLF01226	PDI-012 Isolation Valve	
3/8" PLF01228	FIT-012 Isolation Valve	
3/8" PLF01229	FIT-012 Isolation Valve	
1" DR01230	F-012 Housing Drain Valve (north side)	
1" DR01232	F-012 Housing Drain Valve (south side)	
3/8" PLF01302	PDI-013B & PDI-013C root valve	
ID3-24	F-012 Filter Housing Inlet Isolation Damper	
TE-012	Temperature Element	
TT-012	Temperature Transmitter	

Ventilation Equipment Important to Safety
Components List

Identification Number	Component Description	Comments
3/8" PLF01303	PDI-013C Root Valve	
3/8" PLF01304	PDI-013D & PDI-013F Root Valve	
3/8" PLF01305	PDI-013D & PDI-013F Root Valve	
3/8" PLF01306	PDIT-013, PDI-013E & PDI-013G Root Valve	
3/8" PLF01307	PDIT-013, PDI-013E & PDI-013G Root Valve	
3/8" PLF01326	PDI-013 Isolation Valve	
3/8" PLF01328	FIT-013 Isolation Valve	
3/8" PLF01329	FIT-013 Isolation Valve	
1" DR01330	F-013 Housing Drain Valve (north side)	
1" DR01332	F-013 Housing Drain Valve (south side)	
ID3-26	F-013 Filter Housing Inlet Isolation Damper	
TE-013	Temperature Element	
TT-013	Temperature Transmitter	
B-202	SN Evaporator Blower	Pressure Boundary Only
PID3-21	B-202 Inlet Damper	Pressure Boundary Only
TW-202	B-202 Inlet Thermowell	Pressure Boundary Only
PSV-700A	Boiler Relief Valve Outlet Flange to P.O.G. Header	Pressure Boundary Only
PSV-700B	Boiler Relief Valve Outlet Flange to P.O.G. Header	Pressure Boundary Only
T-B031	Boiler Feed Tank and vent line to P.O.G. Header	Pressure Boundary Only
T-B032	Boiler Blowdown Tank and vent line to P.O.G. Header	Pressure Boundary Only

SAFETY SIGNIFICANT HVAC EXHAUST DUCT SUPPORTS				
SUPPORT No.	QTY. OUTSIDE PROCESS BLDG	QTY. INSIDE NORTH STAIR TWR	DESIGN DWG (REF) STRUCT T-CM-FW-D-SS-XXX HVAC T-CM-FW-D-ME-XXX	REMARKS
EDS-202C		1	SS-191-2	
EDS-205A		1	SS-191-2	
EDS-205B		2	SS-191-2	
EDS-221		1	SS-191-2	
EDS-300	7		SS-191-1	
EDS-301	2		SS-191-1	
EDS-302	8		SS-191-1	
EDS-302A	1		SS-191-1	
EDS-303	3		SS-191-1	
EDS-304	1		SS-191-1	
EDS-310	1	3	SS-192, ME-231	
EDS-311		2	SS-192, ME-231	
EDS-315	8	2	SS-192, ME-231 & 232	Support not req'd if penetration sealed with grout or Promatec per DCN-SS-047
EDS-316	1		SS-171	
EDS-318	1		SS-191-1	
EDS-319	2		SS-194, ME-224	
EDS-321		1	SS-194, ME-231	
EDS-322		1	SS-194, ME-228	
EDS-325	1		SS-193	
EDS-326	1		SS-193	
EDS-327	2		SS-193	
EDS-328	1		SS-192	
EDS-329	1		SS-195	
EDS-330	1		SS-195	
EDS-331	1		SS-194, ME-231	
EDS-335	1		SS-202-1	
EDS-336	1		SS-202-1	
EDS-337	1		SS-202-1	
EDS-338	1		SS-202-1	
EDS-342	1		SS-202-2	
EDS-400	1		SS-165	
EDS-401	1		SS-165	
EDS-402	1		SS-165	
EDS-403A	1		SS-165	
EDS-403B	1		SS-165	
EDS-403C	1		SS-165	
EDS-403D	1		SS-165	
EDS-404	2		SS-165	
EDS-405	1		SS-165	
EDS-455	1		SC-211	
PS-3159	1		SS-177-1	PIPE DUCT FROM HOT CELL MAINT AREA TO HEPA FILTER ENCLOSURE
PS-3160	1		SS-177-1	
PS-3161	1		SS-177-2	
PS-3162	1		SS-177-2	
PS-3163	1		SS-177-2	
SUMMARY	64	13		

Uncontrolled Copy printed on 07-30-07, 13:45:03 hours.

END OF DOCUMENT